INSTRUCTION MANUAL

Serial Number _____

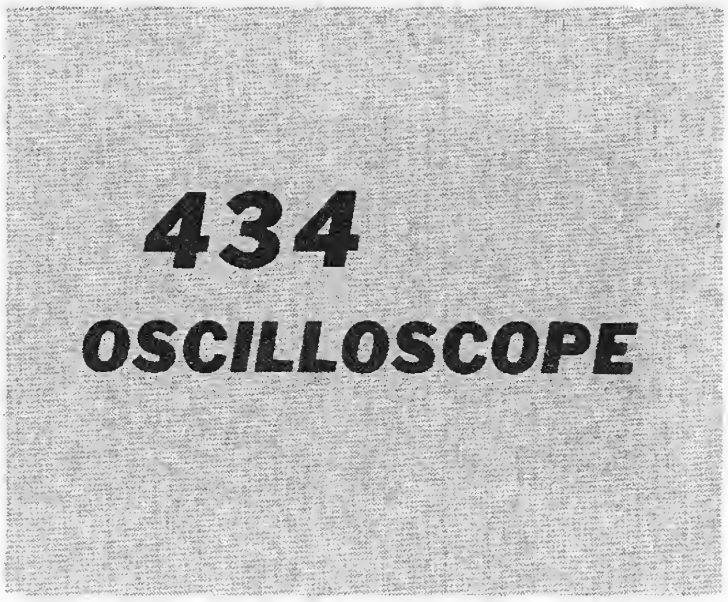

scanned by matt from wellenkino.de

Tektronix, Inc. ● P. O. Box 500 ● Beaverton, Oregon 97005 ● Phone 644-0161 ● Cables: Tektronix

070-1131-00

771

WARRANTY

All Tektronix instruments are warranted against defective materials and workmanship for one year.

Any questions with respect to the warranty, mentioned above, should be taken up with your Tektronix Field Engineer or representative.

All requests for repairs and replacement parts should be directed to the Tektronix Field Office or representative in your area. This procedure will assure you the fastest possible service. Please include the instrument Type (or Part Number) and Serial or Model Number with all requests for parts or service.

Specifications and price change privileges reserved.

Copyright © 1971 by Tektronix, Inc., Beaverton, Oregon. Printed in the United States of America. All rights reserved. Contents of this publication may not be reproduced in any form without permission of the copyright owner.

U.S.A. and foreign Tektronix products covered by U.S. and foreign patents and/or patents pending.

TABLE OF CONTENTS

SECTION 1 434 SPECIFICATION Page

Introduction 1-1
Table 1-1 Electrical
Vertical Deflection System 1-1
Triggering 1-3
Horizontal Deflection System 1-4
Calibrator 1-6
Z Axis Input 1-6
Power Source 1-6
Display 1-6
Table 1-2 Environmental 1-7
Table 1-3 Physical 1-8

SECTION 2 OPERATING INSTRUCTIONS

General 2-1
Operating Voltage 2-1
Operating Temperature 2-1
Operating Position 2-1
Rackmounting 2-1
Controls and Connectors
General 2-2
General Operating Information
Intensity Control 2-5
Astigmatism Adjustment 2-5
Trace Alignment Adjustment 2-5
Graticule 2-5
Light Filter 2-5
Beam Finder 2-6
Bandwidth Limiter 2-6
Vertical Channel Selection 2-6
Vertical Gain Adjustment 2-6
Step Attenuator Balance Adjustment 2-7
Signal Connections 2-7
Loading Effect of 434 2-7
Ground Considerations 2-8
Input Coupling 2-8
Deflection Factor 2-8

SECTION 2 OPERATING INSTRUCTIONS (cont) Page

Dual-Trace Operation 2-8
Algebraic Addition 2-9
Trigger Source 2-9
Trigger Coupling 2-9
Trigger Slope 2-10
Trigger Level 2-10
Sweep Mode 2-10
Horizontal Sweep Rates 2-12
Sweep Magnification 2-12
Horizontal Position Control 2-12
External Horizontal Input 2-12
Intensity Modulation 2-12
Calibrator 2-13
Simplified Operating Instructions
General 2-13
Normal Sweep Display 2-13
Magnified Sweep Display 2-13
External Horizontal Display 2-13
Storage Operation
General 2-14
Slow and Medium Sweep Rates 2-14
Integrated Fast-Rise Waveforms 2-14
Fast Single-Sweep Enhancement 2-15
Applications
General 2-15
Peak-To-Peak Voltage Measurement—AC 2-15
Instantaneous Voltage Measurement—DC 2-16
Comparison Measurements 2-17
Time Duration Measurements 2-19
Determining Frequency 2-19
Risetime Measurements 2-19
Time Difference Measurements 2-20
Multi-Trace Phase Difference Measurements 2-21
High Resolution Phase Measurements 2-22
Common-Mode Rejection 2-22

CONTENTS (cont)

SECTION 3 CIRCUIT DESCRIPTION	Page
Introduction	3-1
Block Diagram	
General	3-1
Circuit Operation	
General	3-3
Channel 1 Input Amp And Preamp	3-3
Channel 2 Input Amp And Preamp	3-5
Channel Switch	3-6
Vertical Output Amplifier	3-9
Trigger Pickoff And Generator	3-10
Sweep Generator	3-13
Horizontal Amplifier	3-16
Power Supply Primary	3-18
Power Supply Secondary	3-21
CRT Circuit	3-21
Calibrator	3-24
Storage Circuit	3-24

SECTION 4 MAINTENANCE	
Introduction	4-1
Cabinet Removal	4-1
Preventive Maintenance	
General	4-1
Cleaning	4-1
Lubrication	4-2
Transistor Checks	4-2
Recalibration	4-2
Troubleshooting	
Introduction	4-2
Troubleshooting Aids	4-2
Troubleshooting Equipment	4-4
Troubleshooting Techniques	4-4
Corrective Maintenance	
General	4-8
Obtaining Replacement Parts	4-8
Soldering Techniques	4-8
Component Replacement	4-9
Recalibration After Repair	4-11
Instrument Repackaging	4-11

SECTION 5 CALIBRATION	Page
Introduction	5-1
Tektronix Field Service	5-1
Using This Procedure	5-1
Test Equipment Required	
General	5-1
Special Calibration Fixtures	5-1
Calibration Equipment Alternatives	5-1
Test Equipment	5-2
Index to Calibration Procedure	5-4
Preliminary Procedure for Complete Calibration	5-4
Preliminary Control Settings	5-5
Power Supply And Display	5-6
Vertical System Adjustment	5-14
Trigger Circuit Adjustment	5-21
Horizontal System Calibration	5-24
Calibrator Circuit Adjustment	5-27

SECTION 6 RACKMOUNTING	
Introduction	6-1
Rack Dimensions	6-1
Mounting Procedure	6-1
Portable Conversion	6-2
Rear Panel Signal Connections	6-2

SECTION 7 ELECTRICAL PARTS LIST	
Abbreviations and Symbols	
Parts Ordering Information	
Index of Electrical Parts List	
Electrical Parts List	

SECTION 8 DIAGRAMS AND CIRCUIT BOARD ILLUSTRATIONS	
Symbols and Reference Designators	8-1
Voltage and Waveform Test Conditions	8-2
Diagrams	
Circuit Board Illustrations	

CONTENTS (cont)

SECTION 9 MECHANICAL PARTS LIST

Mechanical Parts List Information
Index of Mechanical Parts List and Illustrations
Mechanical Parts List

CHANGE INFORMATION

Abbreviations and symbols used in this manual are based on or taken directly from IEEE Standard 260 "Standard Symbols for Units", MIL-STD-12B and other standards of the electronics industry. Change information, if any, is located at the rear of this manual.

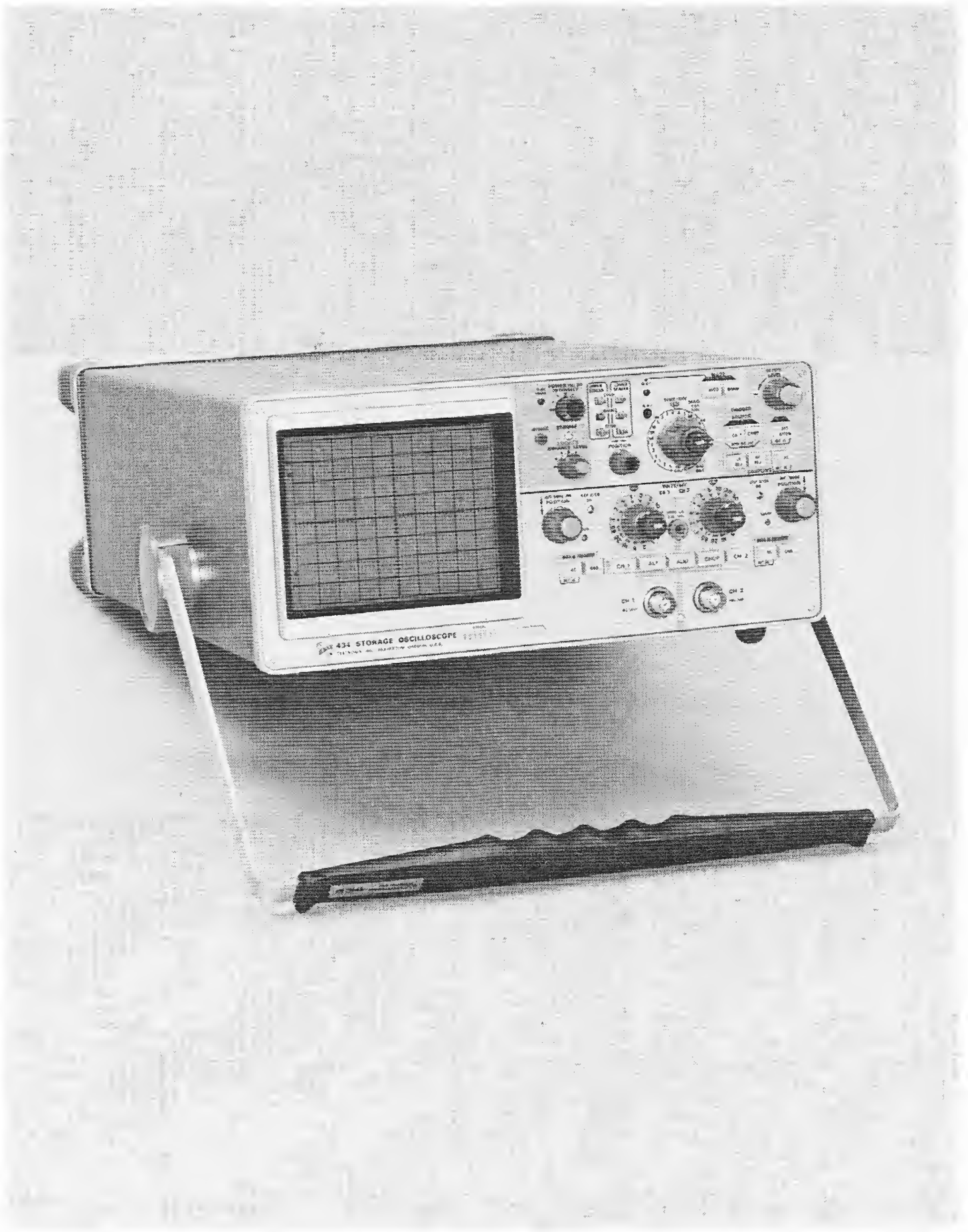

Fig. 1-1. 434 Oscilloscope.

SECTION 1
434 SPECIFICATION

Change information, if any, affecting this section will be found at the rear of the manual.

Introduction

The Tektronix 434 Oscilloscope is a solid-state portable instrument that combines small size and light weight with the ability to make precision waveform measurements. It is designed for general-purpose applications where display storage is desired, along with conventional (non-store) operation. The instrument is mechanically designed to withstand the shock, vibration, and other extremes of environment associated with portability.

The dual-channel DC-to-25 megahertz vertical system provides calibrated deflection factors from 1 millivolt to 10 volts/division. The trigger circuits provide stable triggering over the full range of vertical frequency response. The horizontal deflection system provides calibrated unmagnified sweep rates from 5 seconds to 0.2 microsecond/division. A push-to-turn direct-reading six-position magnifier allows sweep magnification up to a maximum of 50 times and provides a maximum sweep rate of 0.02 microsecond/division.

X-Y measurements can be made applying the vertical (Y) signal to one of the vertical input connectors (appropriate vertical mode of operation selected) and the horizontal (X) signal to the EXT HORIZ connector on the instrument rear panel (TIME/DIV switch set to EXT HORIZ).

The cathode-ray tube is a direct view, bistable storage tube having an 8 X 10 division display area divided into two 4 X 10 division storage screens. The storage screens are independently controlled for split-screen applications. A non-storing area to the left of the storage screens permits beam location without disturbing a stored display.

The regulated low-voltage power supply assures that instrument performance is not affected by variations in line voltage and frequency. A new design light-weight, high efficiency power supply used in the 434 permits instrument operation over a wide range of line voltages and frequencies without line voltage range selection.

Information given in this instruction manual applies to the R434 also unless otherwise indicated. The R434 is electrically identical to the 434, but is adapted for mounting in a standard 19-inch rack. Rackmounting instructions and a dimensional drawing for the R434 are provided in Section 6 of this manual.

The electrical characteristics which follow are divided into two categories. Characteristics listed in the Performance Requirement column are instrument specifications, and are checked in the Performance Check procedure provided in the Calibration section. Data in the Supplemental Information column does not constitute instrument specifications and is provided for reference only. The following electrical characteristics apply over an ambient temperature range of −15°C to +55°C, except as otherwise indicated. Warm-up time for given accuracy is 30 minutes.

TABLE 1-1

ELECTRICAL

Characteristic	Performance Requirement		Supplemental Information
VERTICAL DEFLECTION SYSTEM			
Deflection Factor			
Channel 1 or 2 calibrated range			
Without probe	1 mV to 10 V/div in 13 steps. Steps in a 1-2-5 sequence.		
With 10X probe	10 mV to 100 V/div in 13 steps. Steps in a 1-2-5 sequence.		
Accuracy	Within 3% of indicated deflection.		
Uncalibrated (VAR) range	Provides continuously variable deflection factors between the calibrated steps. Extends maximum uncalibrated deflection factor to at least 25 volts/division.		Each deflection factor increased by a factor of at least 2.5:1.
Bandwidth At Upper −3 dB Point	−15°C to +30°C	+30°C to +55°C	
1 mV/DIV	18 MHz	16 MHz	Bandwidth checked with a six-division reference signal DC coupled.
2 mV/DIV	20 MHz	18 MHz	
5 mV/DIV	23 MHz	21 MHz	
10 mV/DIV to 10 V/DIV	25 MHz	25 MHz	
Risetime (+20°C to +30°C)			
1 mV/DIV	19.5 nanoseconds		Risetime checked with a six-division positive-going step from a 25-ohm source centered vertically at all deflection factors.
2 mV/DIV	17.5 nanoseconds		
5 mV/DIV	15.2 nanoseconds		
10 mV/DIV to 10 V/DIV	14 nanoseconds		
Bandwidth at Lower −3 dB Point (AC Coupled)			
Without Probe	10 Hz or less to at least 25 megahertz.		
With X10 Probe	1 Hz or less to at least 25 megahertz.		

TABLE 1-1 (cont)

Characteristic	Performance Requirement	Supplemental Information
Input RC Characteristics		
Resistance	1 megohm within 2%.	
Capacitance	Approximately 24 picofarads.	
Vertical Display Modes	Channel 1 only. Channel 2 only. Dual-Trace, alternate between channels. Dual-Trace, chop between channels. Added algebraically	
Input Coupling Modes	AC (capacitive) coupled, DC (direct) coupled, or AC Pre-Charge.	
Maximum Safe Input Voltage		
DC Coupled		250 V (DC plus peak AC) 500 V peak to peak AC (1 kHz or less)
AC Coupled		500 V (DC plus peak AC) 500 V peak to peak AC (1 kHz or less)
Chopped Mode Rate	Approximately 100 kilohertz.	
Signal Delay (Delay Line)	Allows viewing leading edge of a triggering waveform.	
Step Attenuator Balance		Adjustable for no trace shift when deflection factor is changed from 1 mV/DIV to 10 mV/DIV.
Polarity Inversion	Display signal from Channel 2 can be inverted.	
	TRIGGERING	
Trigger Source	Internal from Channel 1 only or from displayed channel(s). Internal from AC power source. External from signal applied to EXT TRIG INPUT connector. External from signal applied to EXT TRIG INPUT connector attenuated 10 times.	

TABLE 1-1 (cont)

Characteristic	Performance Requirement	Supplemental Information
Trigger Coupling	AC AC low-frequency reject High-frequency reject DC The combination of high-frequency reject and AC low-frequency reject.	
Trigger Sensitivity	See Fig. 1-2.	
External Input RC Characteristics		
Resistance		One megohm within 2%.
Capacitance		Approximately 100 picofarads 1:1. Approximately 70 picofarads 1:10.

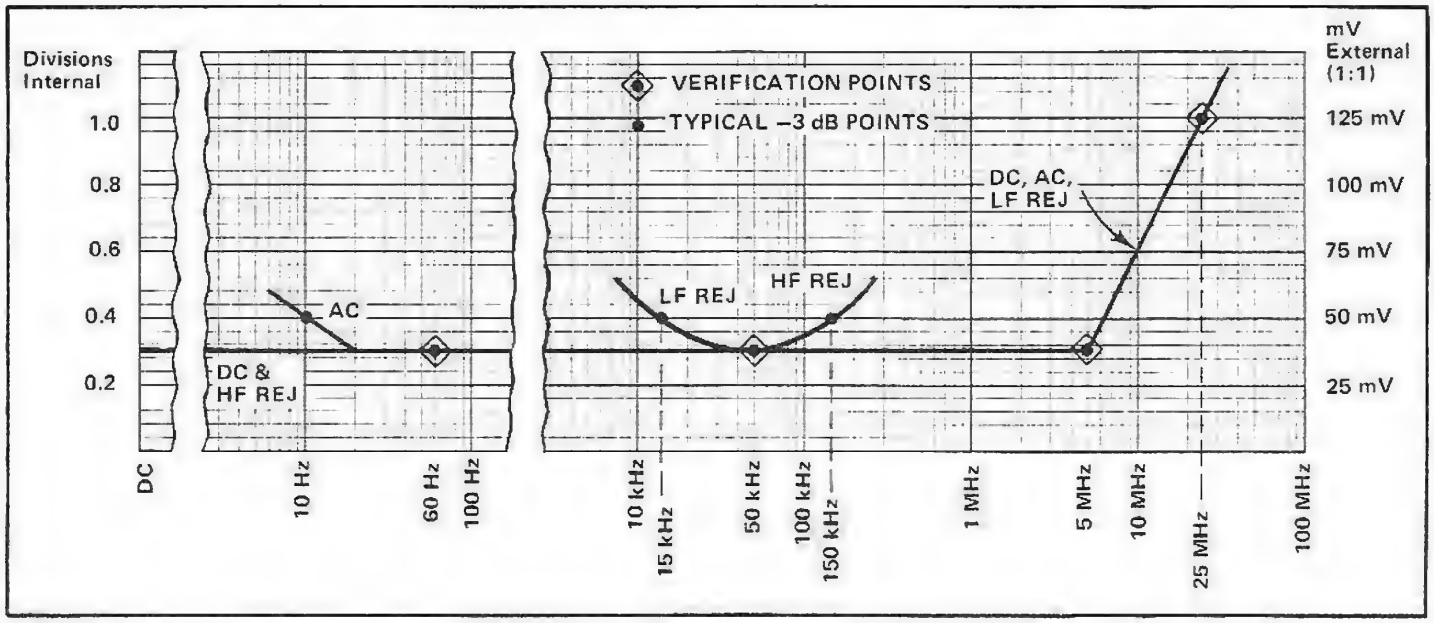

Fig. 1-2. Trigger sensitivity specification limit curve.

HORIZONTAL DEFLECTION SYSTEM

Sweep Mode	Normal–Stable display presented only with signals meeting limits specified in Fig. 1-2. No display presented in the absence of an adequate trigger signal. Automatic–Stable display presented only with signals meeting limits specified in Fig. 1-2. Presents a free-running	

TABLE 1-1 (cont)

Characteristic	Performance Requirement		Supplemental Information
	trace in the absence of an adequate trigger signal. Single Sweep–Sweep Generator produces only one sweep when triggered. Further sweeps are locked out until RESET button is pressed.		
Calibrated Sweep Rates (unmagnified)	0.2 microsecond to 5 seconds/division in 23 steps in a 1-2-5 sequence.		
Magnifier	Direct-reading, six position, push to turn switch with up to 50 times maximum magnification. Extends the fastest sweep rate to 20 nanoseconds/division.		
Sweep Time Accuracy	Unmagnified	Magnified	Over full 10 displayed horizontal divisions. Exclude the following portions of the sweep when checking magnified timing: X2 magnification – first and last 0.5 div. X5 magnification – first and last one div. X10 magnification – first and last two div. X20 magnification – first and last five div. X50 magnification – first and last ten div.
+20°C to +30°C	Within 3%	Within 4%	
–15°C to +55°C	Within 4%	Within 5%	
Uncalibrated (variable) Sweep Rates	Provides continuously variable sweep rates between the calibrated steps. Extends the slowest uncalibrated sweep rate to at least 12.5 seconds/division.		At least 2.5:1.
EXT HORIZ Input			
Resistance			Approximately 50 kilohms.
Sensitivity	≈0.5 volt/division		
Bandwidth			DC to 500 kHz (10 div reference signal).

TABLE 1-1 (cont)

Characteristic	Performance Requirement	Supplemental Information
	CALIBRATOR	
Output Voltage (+20°C to +30°C)	Adjustable to 0.6 volt within 0.25%, open circuit.	Within 1.5% open circuit from −15°C to +20°C and from +30°C to +55°C.
Repetition Rate (+20°C to +30°C)	Adjustable to one kilohertz within 0.25%.	Within 0.5% from −15°C to +20°C and +30°C to +55°C.
Output Resistance		Approximately 250 ohms.
	Z AXIS INPUT	
Sensitivity	Five volt peak to peak signal causes noticeable modulation at normal intensity.	Positive-going signal decreases intensity.
Usable Frequency Range	DC to 20 megahertz.	
Input Resistance		Approximately 50 kilohms.
	POWER SOURCE	
Line Voltage and Frequency Range	Operates on all nominal voltages from 100 volts to 240 volts AC, 50 to 400 Hz, and 100 volts to 250 volts DC.	No range switching necessary.
Power Consumption	90 volt amperes or 10 watts maximum.	
	DISPLAY	
Graticule		
Type	Internal	
Area	Eight divisions vertical by 10 divisions horizontal. Each division equals .98 centimeter.	
Beam Finder	Limits display within graticule area when pressed.	
Storage Writing Speed	100 cm/ms minimum (400 cm/ms enhanced).	

TABLE 1-2

ENVIRONMENTAL

Characteristic	Performance Requirement	Supplemental Information
Temperature		
Operating	–15°C to +55°C	
Non-Operating	–55°C to +75°C	
Altitude		
Operating	To 15,000 feet	Maximum allowable operating temperature decreased by 1°C per 1000 feet from 5000 feet to 15,000 feet.
Non-Operating	To 50,000 feet	
Humidity		
Operating and Non-Operating	Five cycles (120 hours) referenced to MIL-E-16400F.	
Vibration		
Operating and Non-Operating	15 minutes along each of the 3 major axes at a total displacement of 0.025 inch peak to peak (4 g's at 55 Hertz) with frequency varied from 10 to 55 to 10 Hertz in one minute sweeps. Hold for three minutes at 55 Hertz. All major resonances must be above 55 Hertz.	
Shock		
Operating and Non-Operating	30 g's, 1/2 sine, 11 milliseconds duration, two shocks per axis each direction for a total of 12 shocks.	
Transportation	Tested to National Safe Transit Committee procedure 1A with a 30 inch drop.	
Electromagnetic Interference (MOD 163D Only)	As tested in MIL-I-6181D	
Radiated	150 kilohertz to one gigahertz with mesh filter installed.	Mesh filter reduces light output approximately 56%.
Conducted	150 kilohertz to 25 megahertz.	

TABLE 1-3

PHYSICAL

Characteristic	Performance Requirement
Construction	
Chassis	Aluminum alloy.
Panel	Aluminum alloy with anodized finish.
Cabinet	Blue vinyl-coated aluminum.
Circuit Boards	Glass-epoxy laminate.

TABLE 1-3 (cont)

Characteristic	Performance Requirement
Overall Dimensions	
Height	5.6 inches.
Width	13 inches including handle.
Depth	18.6 inches.
Weight (Including Panel Cover and Accessories)	20 pounds, 6 ounces.
Domestic Shipping Weight	30 pounds, 2 ounces.
Export-Packed Shipping Weight	35 pounds, 2 ounces.

SECTION 2
OPERATING INSTRUCTIONS

Change information, if any, affecting this section will be found at the rear of this manual.

General

To effectively use the 434 Oscilloscope, the operation and capabilities of the instrument must be known. This section describes the operation of front-panel controls, gives simplified and general operating information, and lists some basic applications for this instrument.

OPERATING VOLTAGE

General

The 434 can be operated on all nominal line voltages from 100 volts to 240 volts AC, 50 to 400 hertz. It can also be operated from a 100 volts to 250 volts DC power source. No range switching or selection is necessary.

CAUTION

This instrument is designed for operation from a power source with its neutral at or near earth (ground) potential (for both AC and DC power sources) with a separate safety-earth conductor. It is not intended for operation from two phases of a multi-phase AC system, or across the legs of a single-phase, three-wire AC system.

The 434 is designed to be used with a three-wire AC power system. If a three- to two-wire adapter is used to connect this instrument to a two-wire AC power system, be sure to connect the ground lead of the adapter to earth (ground). Failure to complete the ground system may allow the chassis of this instrument to be elevated above ground potential and pose a shock hazard.

When operating the instrument from an external DC power source, polarity of the external voltage is unimportant. Again, it is imperative to complete the ground system to prevent accidental elevation of the instrument chassis and resultant shock hazard.

Operating Temperature

The 434 requires very little air circulation for proper operation. A thermal cutout in the instrument provides thermal protection and disconnects the instrument power if the internal temperature exceeds a safe operating level. Power is automatically restored when the temperature returns to a safe level.

The 434 can be operated where the ambient temperature is between −15°C and +55°C. The maximum operating temperature must be derated 1°C for each 1000 feet of altitude above 5000 feet. This instrument can be stored in ambient temperatures between −55°C and +75°C. After storage at temperatures beyond the operating limits, allow the chassis temperature to come within the operating limits before power is applied.

Operating Position

The handle of the 434 can be positioned for carrying or as a tilt-stand for the instrument. To position the handle, press in at both pivot points (see Fig. 2-1) and turn the handle to the desired position. Fourteen positions are provided for convenient carrying or viewing. The instrument can also be set on the rear feet for either operation or storage.

Rackmounting

Complete information for mounting the 434 in a cabinet rack is given in Section 6 of this manual.

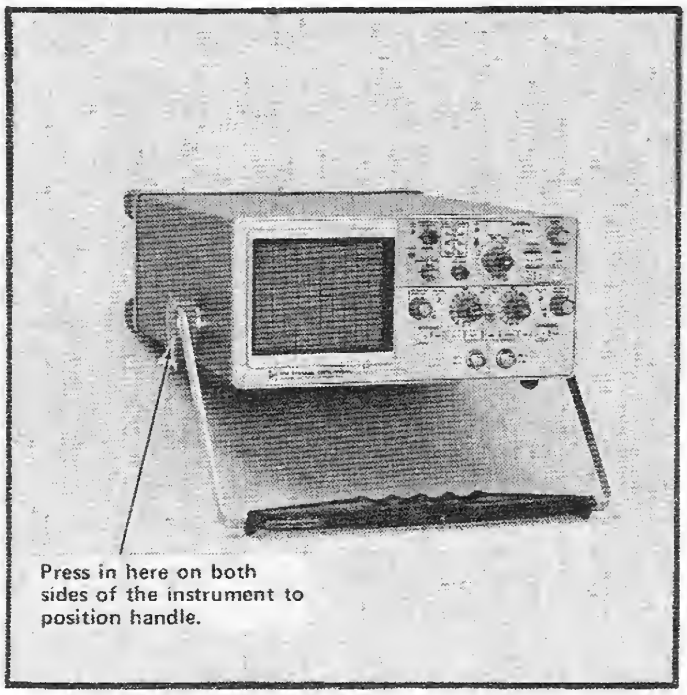

Fig. 2-1. Handle positioned to provide a stand for the instrument.

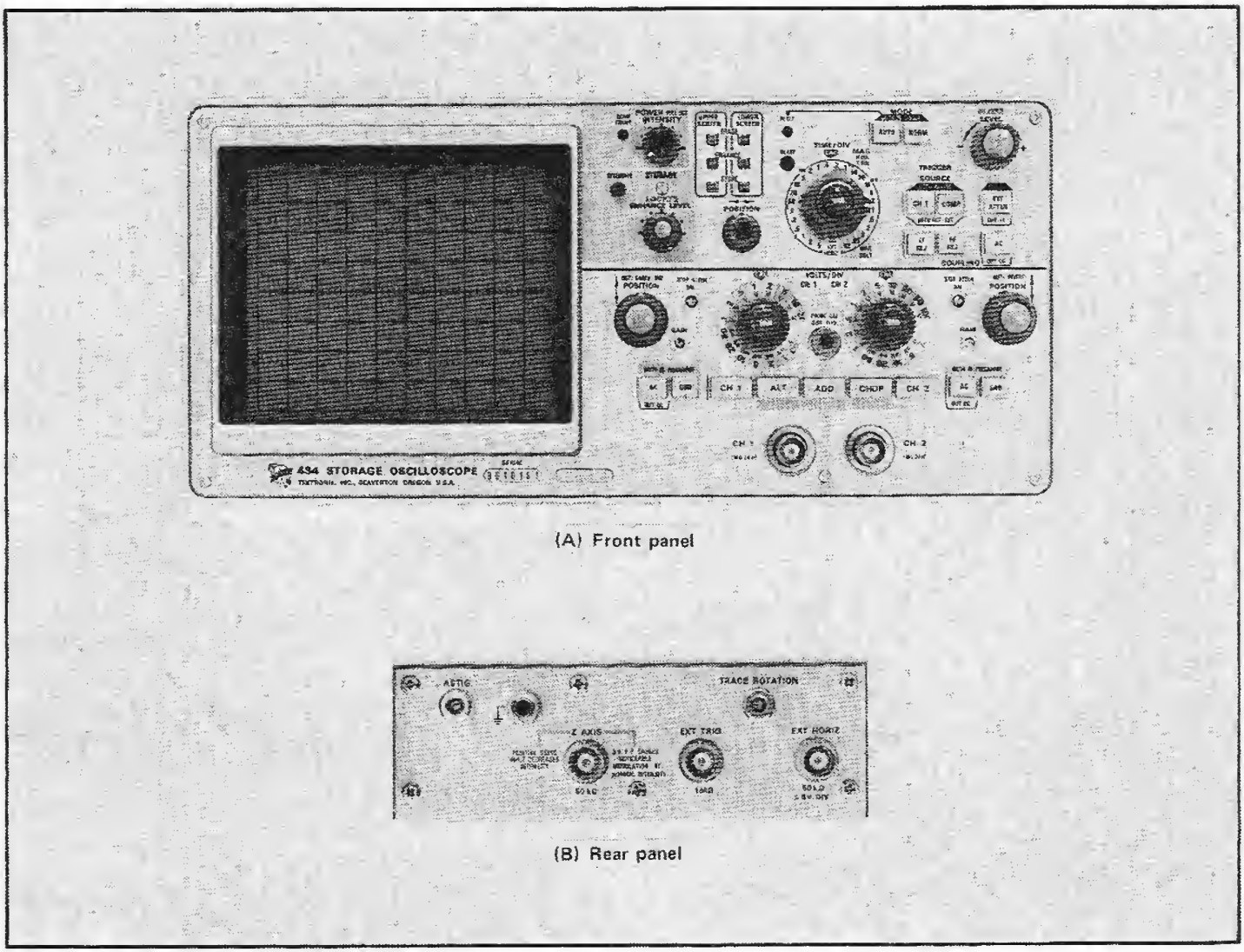

(A) Front panel

(B) Rear panel

Fig. 2-2. Front- and rear-panel controls and connectors.

CONTROLS AND CONNECTORS

General

A brief description of the function and operation of the instrument's controls and connectors follows. Fig. 2-2 shows the front and rear panels of the instrument. More detailed information is given in this section under General Operating Information.

Display

INTENSITY and POWER	A combination control that turns instrument power on or off (pull ON-push OFF) and also controls the brightness of the display.
BEAM FINDER	Compresses the display within the graticule area independently of display position or applied signals.
ASTIGmatism (Rear panel)	Adjusts CRT beam for optimum display definition.
TRACE ROTATION (Rear panel)	Screwdriver adjustment to align trace with horizontal graticule lines.

Vertical (both channels if applicable)

VOLTS/DIV	Selects vertical deflection factor in a 1-2-5 sequence (Variable control must be in the CAL position for indicated deflection).
Variable	Provides continuously variable deflection factors between the calibrated settings of the VOLTS/DIV switch.
POSITION	Controls the vertical position of the trace.

5 MHz BW — A push-push switch that limits the complete vertical amplifier system bandwidth to approximately 5 MHz.

INVERT (CH 2 only) — A push-push switch to invert the Channel 2 display.

GAIN — Screwdriver adjustment to set the gain of the vertical amplifier.

STEP ATTEN BAL — Screwdriver adjustment to balance the input amplifier in the 1 mV, 2 mV, 5 mV, and 10 mV positions of the VOLTS/DIV switches.

Input Coupling (AC/DC, GND) — Selects method of coupling input signal to input amplifier.

AC: In the AC position (button in) of this push-push switch, signals are capacitively coupled to the vertical amplifier. The DC component of the input signal is blocked. Low frequency −3 dB down point is about 10 hertz.

DC: In the DC position (button out) of the AC push-push switch, all components of the input signal are passed to the input amplifier.

GND: In the GND position (button in) of this push-push switch, the input of the vertical amplifier is disconnected from the input connector and grounded. Allows precharging of the input coupling capacitor.

CH 1 and CH 2 Input — Input connectors that allow application of external signals to the inputs of the vertical amplifier. Includes a coding ring for probes with scale factor switching.

Mode (Not labeled) — Selects mode of operation for vertical input amplifiers.

CH 1: Displays Channel 1 only.

ALT: Dual-trace display of signals on both channels. Display switched between channels at the end of each sweep.

ADD: Signals applied to the CH 1 and CH 2 Input connectors are algebraically added and the algebraic sum is displayed on the CRT. The INVERT switch in Channel 2 allows the display to be CH 1 + CH 2 or CH 1 − CH 2.

CHOP: Dual-trace display of signals on both channels. Display switched at a repetition rate of approximately 100 kHz.

CH 2: Displays Channel 2 only.

Triggering

SOURCE — Selects source of trigger signal.

CH 1: A pushbutton switch that in the CH 1 position (button in) selects CH 1 as an internal trigger source.

COMP: A pushbutton switch that in the COMP position (button in) allows the internal trigger source to be determined by the vertical mode of operation.

LINE: When both the CH 1 and COMP switches are pressed in, a portion of the line frequency voltage is used as a trigger signal.

EXT: When both the CH 1 and COMP switches are out, signals applied to the EXT TRIG connector are used for triggering.

EXT ATTEN — In the 1:10 position (button in) of this push-push switch, external trigger signals are attenuated by a factor of 10. In the 1:1 position (button out) external trigger signals are not attenuated.

COUPLING — Determines method of coupling trigger signal to trigger circuit.

AC: In the AC position (button in) of this push-push switch, DC is rejected and signals below about 20 hertz are attenuated. Accepts signals between about 20 hertz and 25 megahertz.

DC: When both the AC and the LF REJ push-push switches are out, signals are directly coupled to the trigger circuit. Accepts all signals from DC to 25 megahertz

COUPLING (cont)

if LF REJ and HF REJ are in out position.

LF REJ: Rejects DC and attenuates signals below approximately 30 kilohertz. Accepts signals between about 30 kilohertz and 25 megahertz.

HF REJ: Attenuates signals above approximately 50 kilohertz. Accepts signals between DC and approximately 50 kilohertz.

LEVEL

Selects the amplitude point on the trigger signal at which the sweep is triggered.

SLOPE

Selects slope of trigger signal which starts the sweep.

+: Sweep can be triggered from positive-going portion of trigger signal.

—: Sweep can be triggered from negative-going portion of trigger signal.

EXT TRIG
(Rear panel)

Input connector for external trigger signals.

Sweep

POSITION

Controls horizontal position of the display.

TIME/DIV

Selects the sweep rate of the sweep generator (Variable control must be in the CAL position for indicated sweep rate). Extreme counterclockwise position of switch selects External Horizontal mode of operation.

MAG

Push-to-turn switch (concentric with TIME/DIV switch) provides sweep magnification up to a maximum of 50 times. Extends fastest sweep rate to 0.02 μs/div.

Variable
(Not labeled)

Provides uncalibrated sweep rates between the calibrated settings selected by the TIME/DIV switch. The sweep rate in each TIME/DIV switch position can be reduced to at least the sweep rate of the next adjacent position to provide continuously variable sweep rates.

MODE

Determines the operating mode for the sweep generator.

AUTO: In the AUTO position (button in) of this pushbutton switch, the sweep is initiated by the applied trigger signal. In the absence of an adequate trigger signal, the sweep free runs and provides a bright reference trace.

NORM: In the NORM position (button in) of this pushbutton switch, the sweep is initiated by the applied trigger signal. In the absence of an adequate trigger signal, there is no trace.

SINGLE SWEEP: When both the AUTO and NORM switches are pressed in the sweep operates in the Single Sweep mode. After a sweep is displayed, further sweeps cannot be presented until the RESET button is pressed.

RESET

When the RESET button is pressed (in the SINGLE SWEEP mode), a single display will be presented (with correct triggering). After the sweep is completed, the RESET button must be pressed again before another sweep can be displayed.

READY Light

Indicates sweep has been reset and a single display will be presented upon receipt of an adequate trigger signal.

EXT HORIZ
(Rear panel)

Input connector for external horizontal signal when TIME/DIV switch is set to EXT HORIZ.

Storage

STORE
(Upper and lower)

In the STORE position (button in), the CRT operates in the storage mode. In the Non-Store position (button out), the CRT operates in the conventional mode.

ENHANCE
(Upper and lower)

In the ENHANCE position (button in) the writing rate for single-sweep displays is increased (using the ENHANCE LEVEL control).

ERASE
(Upper and lower)

A momentary contact switch that, when pushed, erases a stored display from the CRT.

ENHANCE LEVEL	Provides a selectable increase in writing speed capability for single-sweep displays. Effective only when either or both ENHANCE pushbuttons are depressed.
INTEGRATE	A pushbutton switch that permits storage of very fast repetitive signals by allowing the writing-gun beam to accumulate charges on the target while the flood-gun beams are turned off.
LOCATE	A pushbutton switch that unblanks the CRT and provides a visible indication of the position of the display signal while the sweep is held off. This permits the display to be positioned before storing.

Calibrator

PROBE CAL 0.6 V 1 kHz	Provides a 0.6 volt calibrator signal to permit probe compensation, adjustment of amplifier GAIN, and checking basic horizontal timing.

Power and External Blanking

POWER and INTENSITY	A combination control, part of which is a push-pull switch to control application of power to the instrument.
Z AXIS	Input connector for external blanking signals.

GENERAL OPERATING INFORMATION

Intensity Control

The setting of the INTENSITY control should not affect the correct focus of the display. The focusing control is ganged to the INTENSITY control to provide automatic adjustment of display focus along with adjustment of display intensity.

The light filter and optional EMI mesh filter reduce the observed light output from the CRT. When using these filters, avoid advancing the INTENSITY control to a setting that could cause phosphor damage. When the highest intensity display is desired, remove the filters. Apparent trace intensity can also be improved in such cases by reducing the ambient light or using a viewing hood.

Astigmatism Adjustment

If the CRT display is not well-defined, adjust the ASTIG (rear panel) as follows.

NOTE

The setting of the ASTIG adjustment should be correct for any display. However, fine adjustment of ASTIG for a specific INTENSITY setting may be desirable.

1. Connect the output of the PROBE CAL 0.6 V 1 kHz jack to either channel input and set the VOLTS/DIV switch of that channel to present a three-division display. Set the vertical MODE switch to display the channel selected.

2. Set the TIME/DIV switch to .5 ms.

3. Adjust the INTENSITY control to the desired setting.

4. Set the ASTIG adjustment so the horizontal and vertical portions of the display are as equally focused as possible.

Trace Alignment Adjustment

If a free-running trace is not parallel to the horizontal graticule line, set the TRACE ROTATION adjustment (rear panel) as follows. Position the trace to the center horizontal line. Adjust TRACE ROTATION so the trace is parallel with the horizontal graticule line.

Graticule

The graticule of the 434 is internally marked on the faceplate of the CRT to provide accurate, no-parallax measurements. The graticule is marked with eight vertical and 10 horizontal divisions. Each division is .98 centimeter square. In addition, each major division is divided into five minor divisions at the center vertical and horizontal lines. The vertical gain and horizontal timing are calibrated to the graticule so accurate measurements can be made from the CRT.

Fig. 2-3 shows the graticule of the 434 and defines the various measurement lines. The terminology defined here will be used in all discussions involving graticule measurements.

Light Filter

The tinted light filter provided minimizes light reflections from the face of the CRT to improve contrast when viewing the display under high ambient light conditions. The mesh filter (available as an optional accessory) provides shielding against radiated EMI (electro-magnetic interference) and also serves as a light filter. To remove either

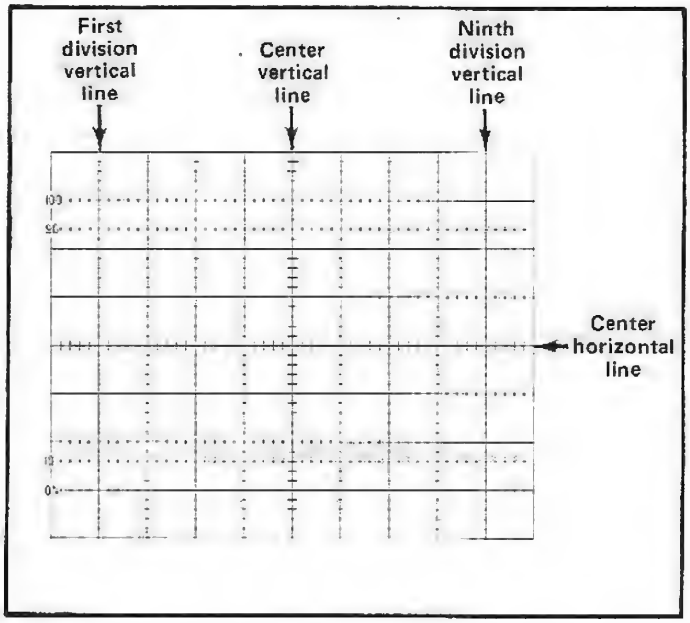

Fig. 2-3. Definition of measurement lines on 434 graticule.

filter, press down at the bottom of the frame and pull the top of the filter away from the CRT faceplate (see Fig. 2-4).

Beam Finder

The BEAM FINDER switch provides a means of locating a display which overscans the viewing area either vertically or horizontally. When the BEAM FINDER pushbutton is pressed, the display is compressed within the graticule area. To locate and reposition an overscanned display, use the following procedure.

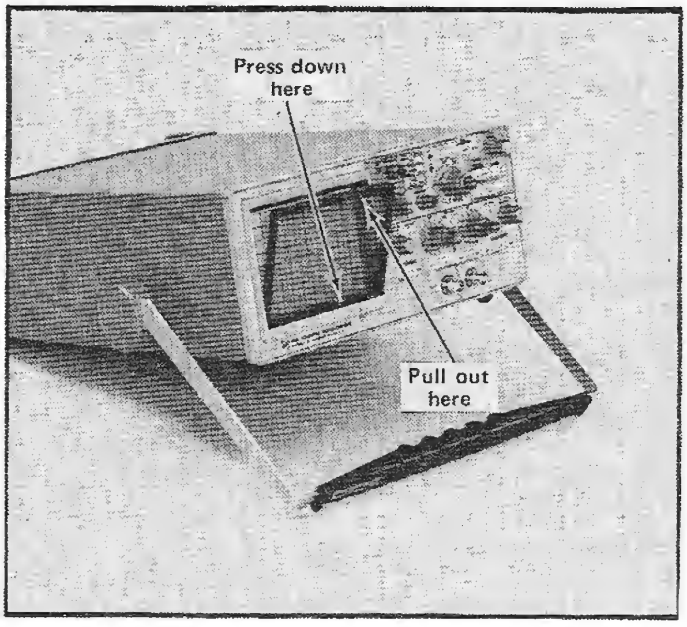

Fig. 2-4. Removing the filter.

1. Press the BEAM FINDER button.

2. While the BEAM FINDER button is held in, increase the vertical deflection factor until the vertical deflection is reduced to about three divisions. The horizontal deflection needs to be reduced only in the EXT HORIZ mode of operation. This can only be accomplished by reducing the amplitude of the external horizontal signal applied to the EXT HORIZ input connector.

3. Adjust the vertical and horizontal POSITION controls to center the display about the vertical and horizontal center lines.

4. Release the BEAM FINDER button; the display should remain within the viewing area.

Bandwidth Limiter

The 5 MHz BW switch provides a method of reducing interference from unwanted high-frequency signals when viewing low-frequency signals. When set to the 5 MHz position (out), the upper −3 dB bandwidth point of the Vertical Deflection system is limited to about five megahertz. Then unwanted high-frequency signals (such as television broadcast radiation interference) are reduced in the displayed waveform. Fig. 2-5 illustrates the use of this feature. The waveform in Fig. 2-5A is the display produced when a low-level, low-frequency signal is viewed in the presence of strong 50-megahertz radiation (switch pressed in). Fig. 2-5B shows the resultant CRT display when the high-frequency interference is reduced by setting the BW switch to the 5 MHz position (out).

Vertical Channel Selection

Either of the input channels can be used for single-trace displays. Apply the signal to the desired input connector and set the Vertical Mode switch to display the channel used. However, since CH 1 triggering is provided only in Channel 1 and the INVERT feature is provided only in Channel 2, the correct channel must be selected to take advantage of these features. For dual-trace displays, connect the signals to both input connectors and set the Vertical Mode switch to one of the dual-trace positions.

Vertical Gain Adjustment

To check the gain of either channel, set the VOLTS/DIV switch to .1 and connect the PROBE CAL 0.6 V 1 kHz connector to the input connector of the channel used. The vertical deflection should be exactly six divisions. If not, adjust the front-panel GAIN adjustment for exactly six divisions of deflection.

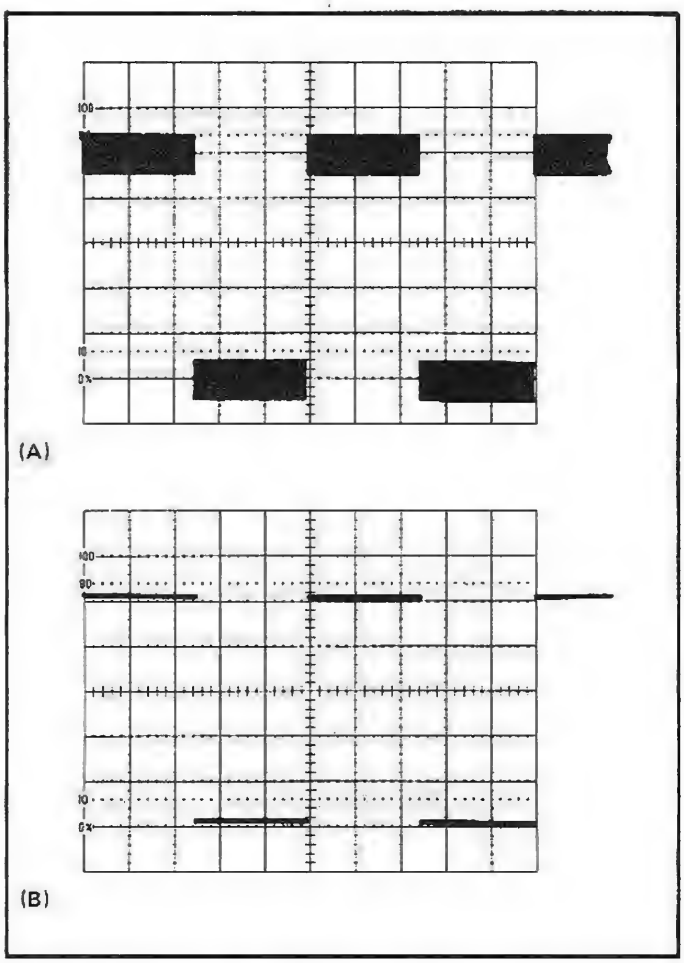

Fig. 2-5. (A) CRT display showing high-frequency interference when attempting to view low-level, low-frequency signal, (B) resultant display when 5 MHz BW switch is set to its out position.

NOTE

If the gain of the two channels must be closely matched (such as for ADD mode operation), the adjustment procedure given in the Calibration section should be used.

The best measurement accuracy when using probes is provided if the GAIN adjustment is made with the probes installed. Also, to provide the most accurate measurements, calibrate the vertical gain of the 434 at the temperature at which the measurement is to be made.

Step Attenuator Balance Adjustment

To check the step attenuator balance of either channel, set the Input Coupling to GND and the Sweep MODE switch to AUTO. Change the VOLTS/DIV switch from 10 mV to 1 mV. If the trace moves vertically, adjust the front-panel STEP ATT BAL adjustment as follows:

1. With the Input Coupling set to GND and the VOLTS/DIV switch set to 10 mV, move the trace to the center horizontal line of the graticule with the vertical POSITION control.

2. Set the VOLTS/DIV switch to 1 mV and adjust the STEP ATT BAL adjustment to return the trace to the center horizontal line.

3. Repeat steps 1 and 2 for minimum trace shift as the VOLTS/DIV switch is changed from 10 mV to 1 mV.

Signal Connections

In general, probes offer the most convenient means of connecting a signal to the input of the 434. Tektronix probes are shielded to prevent pickup of electrostatic interference. A 10X attenuator probe offers a high input impedance and allows the circuit under test to perform very close to normal operating conditions. However, a 10X probe also attenuates the input signal 10 times. A Tektronix field effect transistor probe offers the same high-input impedance as the 10X probes. However, it is particularly useful since it provides wide-band operation while presenting no attenuation (1X gain) and a low input capacitance. A standard 1X probe can be used for signal connections, although it does not provide as high an input impedance and may result in a lower overall bandwidth. Specialized probes are also available from Tektronix, Inc. for high-voltage measurement, current measurement, etc. See the Tektronix, Inc. catalog for characteristics and compatibility of probes for use with this system.

In high-frequency applications requiring maximum overall bandwidth, use coaxial cables terminated in their characteristic impedances at the 434 input connectors. High-level, low-frequency signals can be connected directly to the 434 input connectors using short unshielded leads. This coupling method works best for signals below about one kilohertz and deflection factors above one volt/division. When this coupling method is used, establish a common ground between the 434 and the equipment under test. Attempt to position the leads away from any source of interference to avoid errors in the display. If interference is excessive with unshielded leads, use a coaxial cable or a probe.

Loading Effect of 434

As nearly as possible, simulate actual operating conditions in the equipment under test. Otherwise the equipment under test may not produce a normal signal. The 10X attenuator and field effect transistor probes mentioned previously offer the least circuit loading. See the probe instruction manual for loading characteristics of the probes.

When the signal is coupled directly to the input of the 434, the input impedance is about one megohm paralleled

by about 24 pF. When the signal is coupled to the input through a coaxial cable, the effective input capacitance is increased. The actual input capacitance depends upon the type and length of cable used and the frequency of the signal.

Ground Considerations

Reliable signal measurements cannot be made unless both the oscilloscope and the unit under test are connected together by a common reference (ground) lead in addition to the signal lead or probe. Although the three-wire AC power cord provides a common connection when used with equipment with similar power cords, the ground loop produced may make accurate measurements impossible. The ground straps supplied with the probes provide an adequate ground. The shield of a coaxial cable provides a common ground when connected between two coaxial connectors (or with suitable adapters to provide a common ground). When using unshielded signal leads, a common ground lead should be connected from the 434 chassis to the chassis of the equipment under test.

Input Coupling

The Channel 1 and 2 Input Coupling switches allow a choice of input coupling methods. The type of display desired and the applied signal will determine the coupling to use.

DC Coupling can be used for most applications. This position allows measurement of the DC component of a signal. It must also be used to display signals below about 100 hertz (10 hertz with a 10X probe) as they will be attenuated in the AC position.

With AC Coupling, the DC component of the signal is blocked by a capacitor in the input circuit. The low-frequency response in the AC position is about 10 hertz (−3 dB point). Therefore, some low-frequency attenuation can be expected near this frequency limit. Attenuation in the form of waveform tilt will also appear in square waves which have low-frequency components. AC coupling provides the best display of signals with a DC component which is much larger than the AC components.

The GND position provides a ground reference at the input of the 434 without the need to externally ground the input connectors. The signal applied to the input connector is internally disconnected, but not grounded, and the input circuit is held at ground potential. This also allows pre-charging the input coupling capacitor to prevent application of high-amplitude voltage spikes to the amplifier input.

Deflection Factor

The amount of vertical deflection produced by a signal is determined by the signal amplitude, the attenuation factor of the probe (if used), the setting of the VOLTS/DIV switch and the setting of the Variable VOLTS/DIV control. The calibrated deflection factors indicated by the VOLTS/DIV switches apply only when the Variable VOLTS/DIV control is set to the calibrated detent position.

The Variable VOLTS/DIV controls provide continuously variable (uncalibrated) vertical deflection factors between the calibrated settings of the VOLTS/DIV switches. The Variable control extends the maximum vertical deflection factor of the 434 to at least 25 volts/division (10 V position).

The 434 Oscilloscope features vertical deflection scale-factor switching. When probes having a scale-factor switching connector are used, the correct deflection factor can be read directly from the instrument front panel.

Dual-Trace Operation

Alternate Mode. The ALT position of the Vertical Mode switch produces a display which alternates between Channel 1 and 2 with each sweep of the CRT. Although the ALT mode can be used at all sweep rates, the CHOP mode provides a more satisfactory display at sweep rates below about 0.5 millisecond/division. At these slow sweep rates, alternate mode switching becomes visually perceptible.

Proper internal triggering in the ALT mode can be obtained in either the COMP or the CH 1 position of the TRIGGER SOURCE switch. When in the COMP position, the sweep is triggered from the signal on each channel. This provides a stable display of two unrelated signals, but does not indicate the time relationship between the signals. In the CH 1 position, the two signals are displayed showing true time relationship. If the signals are not time related, the Channel 2 waveform will be unstable in the CH 1 SOURCE switch position.

Chopped Mode. The CHOP position of the Vertical Mode switch produces a display which is electronically switched between channels. In general, the CHOP mode provides the best display at sweep rates slower than about 0.5 millisecond/division or whenever dual-trace, non-repetitive phenomena is to be displayed. At faster sweep rates, the chopped switching becomes apparent and may interfere with the display.

Proper internal triggering for the CHOP mode is provided with the TRIGGER SOURCE switch set to CH 1. If the COMP position is used, the sweep circuits are triggered

from the between-channel switching signal and both waveforms will be unstable. External triggering from a signal which is time-related to either signal provides the same result as CH 1 triggering.

Two signals which are time-related can be displayed in the chopped mode showing true time relationship. However, if the signals are not time-related, the Channel 2 display will appear unstable.

Two non-repetitive, transient or random signals occurring within the time interval determined by the TIME/DIV switch (10 times sweep rate) can be compared using the CHOP mode. To trigger the sweep correctly, the Channel 1 signal must precede the Channel 2 signal. Since the display shows true time relationship, time-difference measurements can be made.

Algebraic Addition

General. The ADD position of the Vertical Mode switch can be used to display the sum or difference of two signals, for common-mode rejection to remove an undesired signal, or for DC offset (applying a DC voltage to one channel to offset the DC component of a signal on the other channel).

Deflection Factor. The overall deflection in the ADD position of the vertical mode switch with both VOLTS/DIV switches set to the same position is the same as the deflection factor indicated by either VOLTS/DIV switch. The amplitude of an added mode display can be determined directly from the resultant CRT deflection, multiplied by the deflection factor indicated by either VOLTS/DIV switch. However, if the Channel 1 and 2 VOLTS/DIV switches are set to different deflection factors, the resultant voltage is difficult to determine from the CRT display. In this case, the voltage amplitude of the resultant display can be determined accurately only if the amplitude of the signal applied to either channel is known.

Precautions. The following general precautions should be observed when using the ADD mode.

1. Do not exceed the input voltage rating of the 434.

2. Do not apply signals that exceed an equivalent of about eight times the VOLTS/DIV switch setting. For example, with a VOLTS/DIV switch setting of .5, the voltage applied to that channel should not exceed about four volts. Larger voltages may distort the display.

3. Use Channel 1 and 2 POSITION control settings which most nearly position the signal of each channel to mid-screen when viewing in either the CH 1 or CH 2 positions of the Vertical Mode switch. This insures the greatest dynamic range for ADD mode operation.

4. For similar response from each channel, set the Channel 1 and 2 Input Coupling switches to the same position.

Trigger Source

COMP. In the COMP position of the TRIGGER SOURCE switch, the trigger signal is obtained from the displayed signal. This position provides the most convenient operation when displaying single channel displays. However, for dual-trace displays, special considerations must be made to provide the correct display. See Dual-Trace Operation in this section for dual-trace triggering information.

CH 1. The CH 1 position of the TRIGGER SOURCE switch provides a trigger signal from only the signal applied to the CH 1 connector. This position provides a stable display of the Channel 1 signal and is useful for certain dual-trace applications (see Dual-Trace Operation).

EXT. An external signal connected to the EXT TRIG connector can be used to trigger the sweep in the EXT position of the TRIGGER SOURCE switch. The external signal must be time-related to the displayed signal to produce a stable display. An external trigger signal can be used to provide a triggered display when the internal signal is too low in amplitude for correct triggering, or contains signal components on which it is not desired to trigger. It is also useful when signal tracing in amplifiers, phase-shift networks, wave-shaping circuits, etc. The signal from a single point in the circuit can be connected to the EXT TRIG connector through a signal probe or cable. The sweep is then triggered by the same signal at all times and allows examination of amplitude, time relationship or wave-shape changes of signals at various points in the circuit without resetting the TRIGGER controls.

Trigger Coupling

Four methods of coupling the trigger signal to the trigger circuits can be selected with the TRIGGER COUPLING switch. Each position permits selection or rejection of the frequency components of the trigger signal which trigger the sweep.

AC. In the AC position of the TRIGGER COUPLING switch, the DC component of the trigger signal is blocked. Signals with low-frequency components below about 20 hertz are attenuated. In general, AC coupling can be used for most applications. However, if the signal contains unwanted low-frequency signals or if the sweep is to be triggered at a low-repetition rate or DC level, one of the

remaining TRIGGER COUPLING switch positions will provide a better display.

The triggering point in the AC position depends upon the average voltage level of the trigger signals. If the trigger signals occur at random, the average voltage level will vary, causing the triggering point to vary also. This shift of the triggering point may be enough so it is impossible to maintain a stable display. In such cases, use DC coupling.

LF REJ. In the LF REJ position, DC is rejected and low-frequency signals below about 30 kilohertz are attenuated. Therefore, the sweep is triggered only by the higher-frequency components of the trigger signal. This position is particularly useful for providing stable triggering if the trigger signal contains line-frequency components. Also, in the ALT position of the Vertical Mode switch the LF REJ position provides the best display at fast sweep rates when comparing two unrelated signals (TRIGGER COUPLING switch set to COMP).

HF REJ. The HF REJ position passes all low-frequency signals between DC and about 50 kilohertz. Signals outside the above range are attenuated. When triggering from complex waveforms, this position is useful for providing stable display of the low-frequency components.

DC. DC coupling can be used to provide stable triggering with low-frequency signals which would be attenuated in the AC position, or with low repetition rate signals. It can also be used to trigger the sweep when the trigger signal reaches a DC level selected by the setting of the LEVEL control. When using internal triggering, the setting of the Channel 1 and 2 POSITION controls affect the DC triggering point of a display when the TRIGGER SOURCE switch is in the COMP position.

DC trigger coupling should not be used in the ALT dual-trace mode if the TRIGGER SOURCE switch is set to COMP. If used, the sweep will trigger on the DC level of one trace and then either lock out completely or free run on the other trace. Correct DC triggering for this mode can be obtained with the TRIGGER SOURCE switch set to CH 1.

With both the LF REJ and HF REJ buttons pushed, only those signals between approximately 30 kilohertz and 50 kilohertz will be passed to the Trigger Generator without being attenuated.

Trigger Slope

The TRIGGER SLOPE switch determines whether the trigger circuit responds to the positive-going or negative-going portion of the trigger signal. When the SLOPE switch is in the positive-going (+) position, the display starts with the positive-going portion of the waveform; in the negative-going (—) position, the display starts with the negative-going portion of the waveform (see Fig. 2-6). When several cycles of a signal appear in the display, the setting of the SLOPE switch is often unimportant. However, if only a certain portion of a cycle is to be displayed, the setting of the SLOPE switch is important to provide a display which starts on the desired slope of the input signal.

Trigger Level

The TRIGGER LEVEL control determines the voltage level on the triggering waveform at which the sweep is triggered. When the LEVEL control is set in the + region, the trigger circuit responds at a more positive point on the trigger signal. In the — region, the trigger circuit responds at a more negative point on the trigger signal. Fig. 2-6 illustrates this effect with different settings of the SLOPE switch.

To set the LEVEL control, first select the TRIGGER source, coupling, and slope. Then, set the LEVEL control fully counterclockwise and rotate it clockwise until the display starts at the desired point.

Sweep Mode

AUTO. The AUTO position of the Sweep MODE switch provides a triggered display when the LEVEL control is correctly set (see Trigger Level in this section) and an adequate trigger signal is available.

When the trigger repetition rate is less than about 10 hertz, or in the absence of an adequate trigger signal, the Sweep Generator free runs at the sweep rate selected by the TIME/DIV switch to produce a reference trace. When an adequate trigger signal is again applied, the free-running condition ends and the Sweep Generator is triggered to produce a stable display (with correct LEVEL control setting).

NORM. Operation in the NORM position of the Sweep MODE switch is the same as in the AUTO position when a trigger signal is applied. However, when no trigger signal is present, the Sweep Generator remains off and there is no display.

Use the NORM mode to display signals with repetition rates below about 10 hertz. This mode provides an indication of an adequate trigger signal as well as the correctness of trigger control settings, since there is no display without proper triggering.

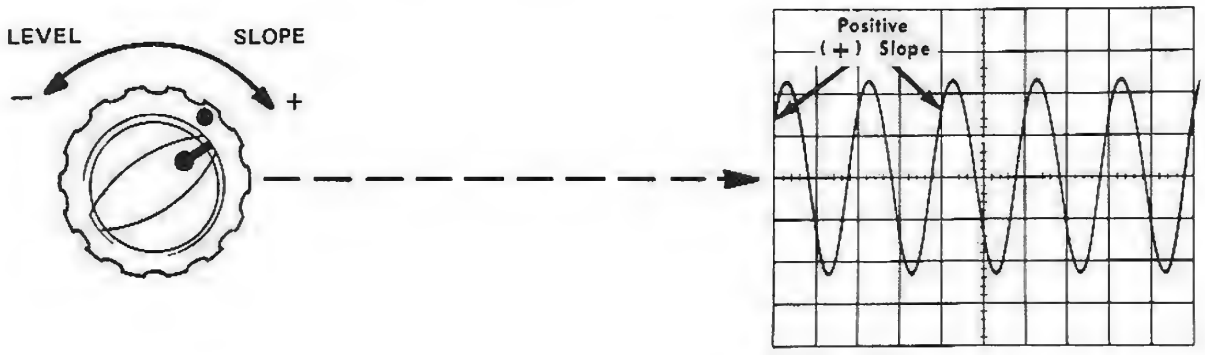

Waveforms obtained with the TRIGGER LEVEL control set in the + region.

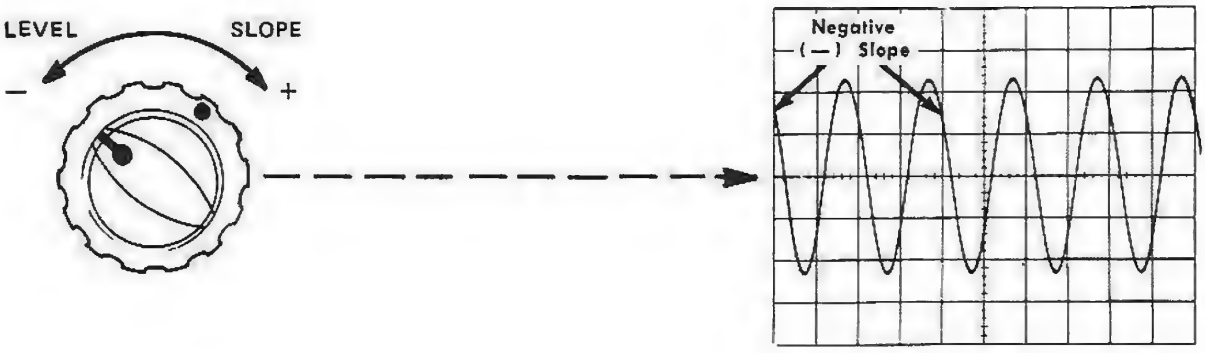

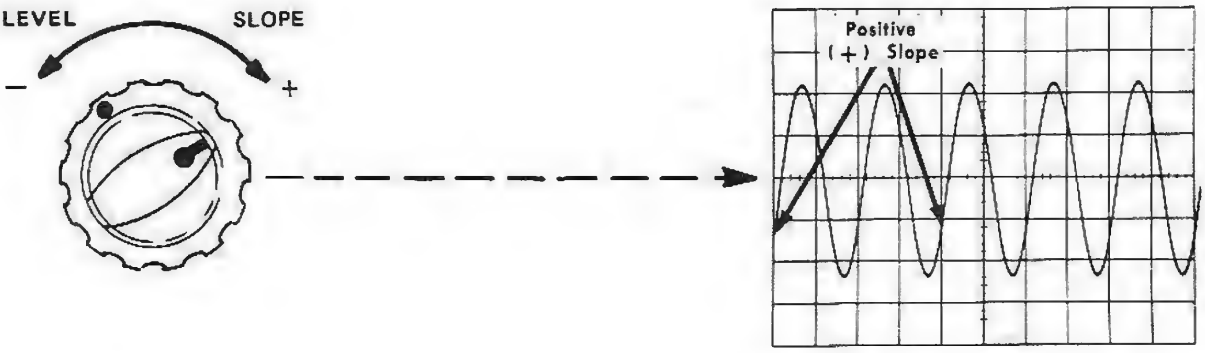

Waveforms obtained with the TRIGGER LEVEL control set in the – region.

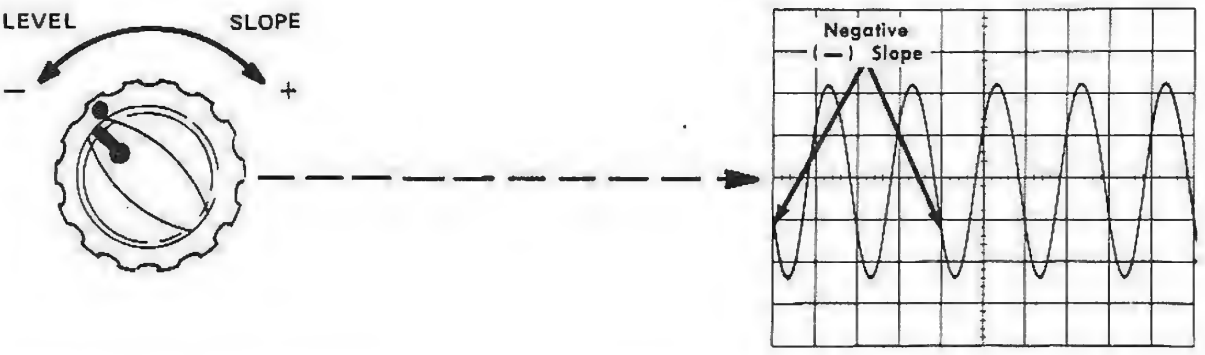

Fig. 2-6. Effect of the TRIGGER LEVEL control and SLOPE switch on the CRT display.

SINGLE SWEEP. When the signal to be displayed is not repetitive or varies in amplitude, shape, or time, a conventional repetitive display may produce an unstable presentation. To avoid this, use the single-sweep feature of the 434. The SINGLE SWEEP mode can also be used to photograph a non-repetitive signal.

To use the SINGLE SWEEP mode, first make sure the trigger circuit will respond to the event to be displayed. Set the Sweep MODE switch to AUTO or NORM and obtain the best possible display in the normal manner (for random signals, set the trigger circuit to trigger on a signal which is approximately the same amplitude and frequency as the random signal). Then, set the Sweep MODE to SINGLE SWEEP and press the RESET button. When the RESET button is pushed, the next trigger pulse initiates the sweep and a single trace will be presented on the screen. After this sweep is complete, the Sweep Generator is "locked out" until reset. The READY light is illuminated when the Sweep Generator has been reset and is ready to produce a sweep. To prepare the circuit for another single-sweep display, press the RESET button again.

Horizontal Sweep Rates

The TIME/DIV switch provides 23 calibrated unmagnified sweep rates ranging from 0.2 microsecond to 5 seconds/division. The three fastest indicated sweep rates can be achieved only by using sweep magnification. The VAR control provides continuously variable sweep rates between the settings of the TIME/DIV switch. The accuracy specifications for the calibrated sweep rates apply over the full ten horizontal divisions of deflection.

Sweep Magnification

The sweep magnifier expands the sweep up to a maximum of 50 times. The center part of the unmagnified display is the portion visible on the screen in magnified form. Equivalent length of the magnified sweep is ten divisions multiplied by the amount of magnification (500 divisions at 50 times magnification); any 10-division portion can be viewed by adjusting the horizontal POSITION control to bring the desired portion onto the viewing area. The dual-range feature of the horizontal POSITION control (see Horizontal Position Control discussion which follows) is particularly useful when the magnifier is on.

To use the magnified sweep, first position the portion of the unmagnified display to be expanded to the center of the graticule. Push in on the TIME/DIV knob and turn clockwise until the desired amount of magnification is achieved (up to a maximum of 50 times). The equivalent time/division is indicated directly by the TIME/DIV knob, and is a calibrated sweep rate when the VAR control is in its calibrated detent.

Horizontal Position Control

The dual-range horizontal POSITION control used in the 434 provides a combination of coarse and fine adjustments in a single control. When this control is rotated, fine positioning is provided for a range of about 0.3 division for normal sweep, or about 15 divisions for magnified operation and the trace can be positioned precisely. Then, after the fine range is exceeded, the coarse adjustment comes into effect to provide rapid positioning of the trace. To use this control effectively for precise positioning, first turn the control to move the trace slightly beyond the desired position (coarse range). Then reverse the direction of rotation to use the fine range to establish the precise trace position desired.

External Horizontal Input

In some applications it is desirable to display one signal versus another signal rather than against time (internal sweep). The EXT HORIZ position of the TIME/DIV switch provides a means for applying an external signal to the horizontal amplifier for this type of display.

Connect the external horizontal signal to the EXT HORIZ connector. The deflection factor is about 0.5 volt/division. The X and Y channels of this instrument are not time matched and some inherent phase shift is apparent. Take this inherent phase shift into account when making measurements. For aid in interpreting lissajous displays, refer to the reference books listed under Applications.

Intensity Modulation

Intensity (Z-axis) modulation can be used to relate a third item of electrical phenomena to the vertical (Y-axis) and the horizontal (X-axis) coordinates without changing the wave shape. A Z-axis modulating signal applied to the CRT circuit changes the intensity of the displayed waveform to provide this display. "Gray scale" intensity modulation can be obtained by applying signals which do not completely blank the display. Large amplitude signals of the correct polarity will completely blank the display; the sharpest display is provided by signals with a fast rise and fall. The voltage amplitude required for visible trace modulation depends on the setting of the INTENSITY control. At normal intensity level, a five-volt peak-to-peak signal produces a visible change in brightness.

Time markers applied to the Z AXIS input connector provide a direct time reference on the display. With uncalibrated horizontal sweep or X-Y mode operation, the time markers provide a means of reading time directly from the display. However, if the markers are not time-related to the displayed waveform, a single-sweep display should be used (for internal sweep only) to provide a stable display.

Calibrator

The internal calibrator of the 434 provides a convenient signal for checking vertical gain. The calibrator output signal available at the front-panel PROBE CAL 0.6 V 1 kHz jack is also very useful for checking and adjusting probe compensation as described in the probe instruction manual.

SIMPLIFIED OPERATING INSTRUCTIONS

General

The following operating instructions will allow calibrated measurements in most applications. The operator should be familiar with the complete function and operation of the instrument as described in this section before using this procedure.

Normal Sweep Display

1. Set the input coupling switches to AC, the Variable VOLTS/DIV controls to their detent positions, and the Vertical Mode switch to CH 1 (use ALT or CHOP for dual-trace display).

2. Set the sweep MODE switch to AUTO, the TRIGGER SLOPE switch to +, the TRIGGER COUPLING switch to AC, and the TRIGGER SOURCE switch to COMP.

3. Set the TIME/DIV switch to 1 mS/DIV and the VAR TIME/DIV control to its calibrated position.

4. Set the POWER switch to the on position and allow several minutes warmup.

5. Connect a signal to the CH 1 input connector.

6. Advance the INTENSITY control until the display is visible (if the display is not visible with the INTENSITY control at midrange, press the BEAM FINDER button and adjust the VOLTS/DIV switch until the display is reduced in size vertically; then center the compressed display with the vertical and horizontal POSITION controls; release the BEAM FINDER button).

7. Set the VOLTS/DIV switch and the vertical POSITION control for a display which remains within the display area vertically.

8. Set the TRIGGER LEVEL control for a stable display.

9. Set the TIME/DIV switch and the horizontal POSITION control for a display which remains within the display area horizontally.

Magnified Sweep Display

1. Follow steps 1-9 for normal sweep.

2. Adjust the horizontal POSITION control to move the area to be magnified to within the center horizontal division of the graticule. There should be equal amounts of the area of interest on either side of the center graticule line. If necessary, change the setting of the TIME/DIV switch and the POSITION control to obtain the desired display.

3. Push in and turn the VOLTS/DIV knob to achieve the desired amount of magnification. The position of the TIME/DIV knob indicates directly the magnified time/div. Adjust the horizontal POSITION control for precise positioning of the magnified display.

External Horizontal Display

1. Set the INTENSITY control fully counterclockwise.

2. Set the Input Coupling switches to AC and the Variable VOLTS/DIV controls to their detent positions.

3. Set the TIME/DIV switch to EXT HORIZ, the Vertical Mode switch to CH 1, and the Sweep MODE to AUTO.

4. Set the POWER switch to the on position and allow several minutes warmup.

5. Connect the X (horizontal) signal to the EXT HORIZ input connector on the instrument rear panel and the Y (vertical) signal to the CH 1 input connector.

6. Advance the INTENSITY control until the display is visible (if display is not visible, push the BEAM FINDER button and adjust the CH 1 VOLTS/DIV switch until the display is reduced in size vertically; the horizontal deflection can only be changed by changing the amplitude of the signal applied to the EXT HORIZ input connector (sensitivity is ≈0.5 volt/division); then center the compressed display with the CH 1 and the horizontal POSITION controls; release the BEAM FINDER button).

7. Adjust the CH 1 VOLTS/DIV switch and the amplitude of the external horizontal signal to obtain a display which remains within the display area.

STORAGE OPERATION

General

The following demonstrations are intended to illustrate the various types of stored displays that are possible and the techniques required to obtain them.

Slow and Medium Sweep Rates

Repetitive-Sweep Storage. This method of storage is used for repetitive waveforms that produce normally bright displays on the CRT screen.

1. Set up a display of the PROBE CAL 0.6 V 1 kHz waveform in the manner described in "Normal Sweep Display".

2. Turn the INTENSITY control fully counterclockwise.

3. Press in both STORE buttons. The normal storage-mode background light level will be present on the storage screens.

4. Advance the INTENSITY control slowly in the clockwise direction to produce a waveform display of normal intensity, then return the control to the minimum (counterclockwise) position. A stored waveform of moderate brightness should remain. Each half of the CRT display area can be stored or erased independently. To erase the stored display, press in the appropriate ERASE pushbutton(s).

Single-Sweep Storage. This method is used for single-sweep events that produce adequate stored displays.

1. Set up a display of the PROBE CAL 0.6 V 1 kHz waveform in the manner described in "Normal Sweep Display".

2. Set the Sweep MODE to SINGLE SWEEP.

3. Press in both STORE buttons.

4. Apply a single sweep of the trace by pressing the RESET pushbutton. A stored display of the calibrator waveform should remain on the storage screen. If it does not, repeat the demonstration with the display intensity increased slightly.

5. During single-sweep operation, the LOCATE pushbutton can be used to locate the trace or display while the sweep is held off. Pressing the LOCATE button unblanks the CRT and allows the display to be positioned before storing.

Integrated Fast-Rise Waveforms

The INTEGRATE pushbutton, when used in conjunction with the INTENSITY control, permits storage of relatively fast-rising and fast-falling portions of a waveform. This method may also be used for producing a high-resolution display of a low-jitter repetitive waveform.

1. Set up a display of the PROBE CAL 0.6 V 1 kHz waveform in the manner described in "Normal Sweep Display".

2. Turn the INTENSITY control fully counterclockwise.

3. Press in both STORE buttons. The normal storage-mode background light level will be present on the storage screens.

4. Advance the INTENSITY control slowly in the clockwise direction to produce a waveform display of normal intensity, then return the control to the minimum (counterclockwise) position. A stored waveform of moderate brightness should remain. However, it should be noted the rising and falling portions of the waveform do not store.

5. Simultaneously press both ERASE buttons to clear the CRT screen.

6. Press the INTEGRATE button and hold it in.

7. Advance the INTENSITY control until the vertical portions of the trace are just barely visible.

8. Hold the INTEGRATE button for a few seconds, then turn the INTENSITY control to minimum while the INTEGRATE button is still pressed.

9. Release the INTEGRATE button. Both the horizontal and vertical segments of the display should now be stored.

CAUTION

Do not attempt to store extremely fast-rising or fast-falling portions of waveforms viewed at relatively slow sweep rates. The high trace intensity required (due to the intensity difference between the horizontal and the vertical segments) could cause storage target damage.

Fast Single-Sweep Enhancement

The Enhance mode provides a method of storing single-sweep displays that exceed the normal writing speed of the instrument. This mode is not normally used for repetitive sweeps.

1. Apply a 30 kHz (350 kHz for Option 1 CRT) sine-wave signal for a CRT display of approximately 3.2 divisions P-P amplitude to one of the vertical input connectors.

2. Set up a normal-intensity non-stored display of the signal in the manner given in "Normal Sweep Display".

3. Set the Sweep MODE to SINGLE SWEEP.

4. Press in both STORE buttons.

5. With the TIME/DIV switch set to 10 μs (2 μs for Option 1 CRT), apply a single sweep of the trace by pressing the RESET button. Note that a complete stored display cannot be obtained for any setting of the INTENSITY control.

6. Depress both ENHANCE buttons, then simultaneously press both ERASE buttons to clear the storage screens.

7. While repeatedly erasing and applying single sweeps, adjust the ENHANCE LEVEL control sufficiently clockwise to completely store the display without fading up the target excessively.

8. For instruments equipped with the option 1 CRT, if portions of the CRT target become faded up and cannot be erased in the normal manner due to inadvertent operation in Repetitive Sweep and Enhanced modes simultaneously, proceed as follows:

Store the entire target by using a repetitive sweep at approximately 1 ms/DIV with Intensity at mid-range. Slowly position the trace from top to bottom to store the entire target area. Switch to Single-Sweep (or non-enhanced storage mode) and erase. The target is now ready for normal storage or single-sweep enhanced storage operation.

NOTE for OPTION ONE instruments

After sustained use (6 hours or more) of the Option One instrument in the Non-Store mode or in Store mode with nothing written, the writing speed may be improved by leaving the CRT target fully stored for five to fifteen minutes. This procedure may be repeated every few hours to refresh the target in applications requiring maximum stored writing rate in a usage where the target is stored a small percentage of the time.

APPLICATIONS

General

The following information describes the procedures and techniques for making basic measurements with a 434 Oscilloscope. These applications are not described in detail, since each application must be adapted to the requirements of the individual measurement. This instrument can also be used for many applications which are not described in this manual. Contact your local Tektronix Field Office or representative for assistance in making specific measurements with this instrument. Also, the following books describe oscilloscope measurement techniques which can be adapted for use with this instrument.

Harley Carter, "An Introduction to the Cathode Ray Oscilloscope", Phillips Technical Library, Cleaver-Hume Press Ltd., London, 1960.

J. Czech, "Oscilloscope Measuring Technique", Phillips Technical Library, Springer-Verlag, New York, 1965.

Robert G. Middleton and L. Donald Payne, "Using the Oscilloscope in Industrial Electronics", Howard W. Sams & Co. Inc., The Bobbs-Merrill Company Inc., Indianapolis, 1961.

Rufus P. Turner, "Practical Oscilloscope Handbook", Volumes 1 and 2, John F. Rider Publisher Inc., New York, 1964.

Peak-to-Peak Voltage Measurements—AC

To make peak-to-peak voltage measurements, use the following procedure:

1. Apply the signal to either input connector.

2. Set the Vertical Mode switch to display the channel used.

3. Set the Input Coupling switch to AC if the DC component of the signal is large enough to shift the display out of the graticule area.

4. Set the VOLTS/DIV switch to display about 3 to 8 divisions of waveform.

NOTE

For low-frequency signals below about 100 hertz, use the DC position to prevent attenuation.

5. Set the TRIGGERING controls to obtain a stable display. Set the TIME/DIV switch to a position that displays several cycles of the waveform.

6. Turn the vertical POSITION control so the lower portion of the waveform coincides with one of the graticule lines below the center horizontal line, and the top of the waveform is on the viewing area. With the horizontal POSITION control, move the display so one of the upper peaks lies near the center vertical line (see Fig. 2-7).

7. Measure the divisions of vertical deflection peak to peak. Make sure the Variable VOLTS/DIV control is in the CAL position.

NOTE

This technique can also be used to make measurements between two points on the waveform, rather than peak to peak.

8. Multiply the distance measured in step 7 by the VOLTS/DIV switch setting. Also include the attenuation factor of the probe, if using a probe that does not have a scale-factor switching connector.

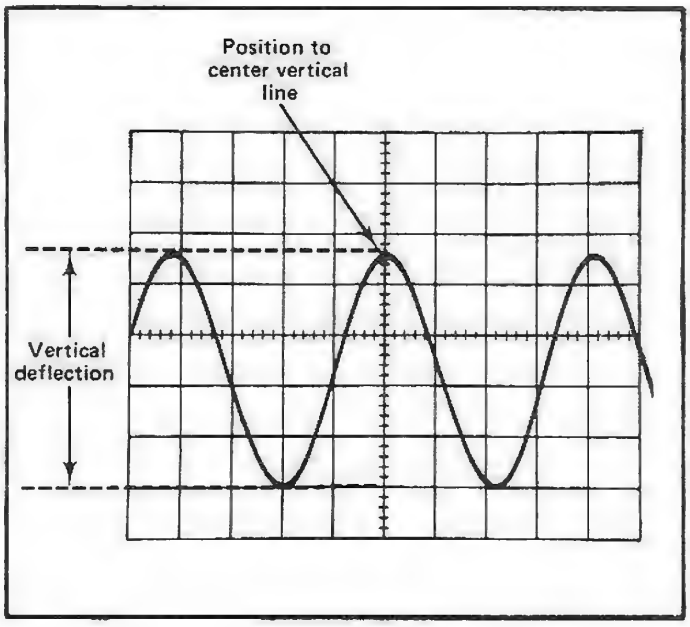

Fig. 2-7. Measuring peak-to-peak voltage of a waveform.

EXAMPLE. Assume that the peak-to-peak vertical deflection is 4.6 divisions (see Fig. 2-7) with a VOLTS/DIV switch setting of .5 V.

$$\text{Volts Peak to Peak} = \text{vertical deflection (divisions)} \times \text{VOLTS/DIV setting}$$

Substituting the given values:

$$\text{Volts Peak to Peak} = 4.6 \times 0.5\ \text{V}$$

The peak-to-peak voltage is 2.3 volts.

Instantaneous Voltage Measurements—DC

To measure the DC level at a given point on a waveform, use the following procedure:

1. Connect the signal to either input connector.

2. Set the Vertical Mode switch to display the channel used.

3. Set the VOLTS/DIV switch to display about six divisions of the waveform.

4. Set the Input Coupling switch to GND.

5. Set the Sweep MODE switch to AUTO.

6. Position the trace to the bottom line of the graticule or other reference line. If the voltage is negative with respect to ground, position the trace to the top line of the graticule. Do not move the vertical POSITION control after this reference line has been established.

NOTE

To measure a voltage level with respect to a voltage other than ground, make the following changes in step 6. Set the Input Coupling switch to DC and apply the reference voltage to the INPUT connector. Then position the trace to the reference line.

7. Set the Input Coupling switch to DC. The ground reference line can be checked at any time by switching to the GND position.

8. Set the TRIGGERING controls to obtain a stable display. Set the TIME/DIV switch to a setting that displays several cycles of the signal.

9. Measure the distance in divisions between the reference line and the point on the waveform at which the DC level is to be measured. For example, in Fig. 2-8 the measurement is made between the reference line and point A.

10. Establish the polarity of the signal. If the waveform is above the reference line the voltage is positive; below the line, negative (with the INVERT switch in for Channel 2).

11. Multiply the distance measured in step 9 by the VOLTS/DIV switch setting. Include the attenuation factor of the probe, if using a probe that does not have a scale factor switching connector.

EXAMPLE. Assume that the vertical distance measured is 4.6 divisions (see Fig. 2-8) and the waveform is above the reference line with a VOLTS/DIV switch setting of 2 V.

Using the formula:

$$\text{Instantaneous Voltage} = \text{vertical distance (divisions)} \times \text{polarity} \times \text{VOLTS/DIV setting}$$

Substituting the given values:

$$\text{Instantaneous Voltage} = 4.6 \times +1 \times 2\ \text{V}$$

The instantaneous voltage is +9.2 volts.

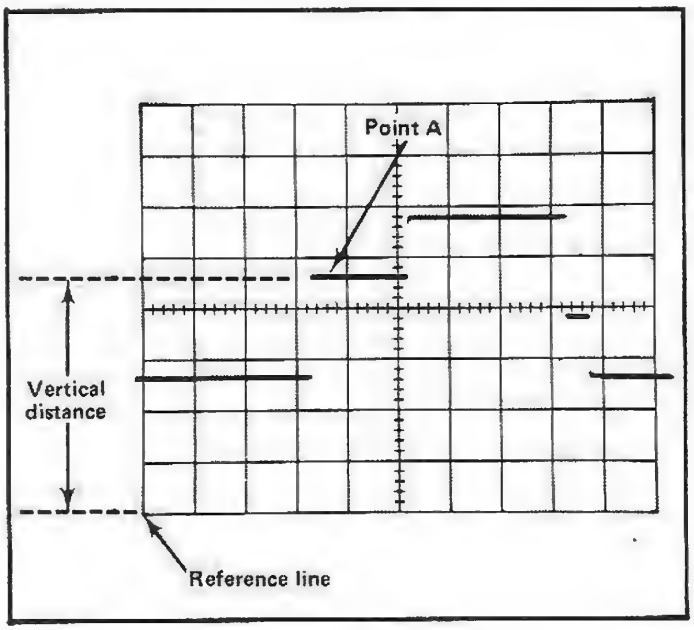

Fig. 2-8. Measuring instantaneous DC voltage with respect to a reference voltage.

Comparison Measurements

In some applications it may be desirable to establish arbitrary units of measurement other than those indicated by the VOLTS/DIV switch or TIME/DIV switch. This is particularly useful when comparing unknown signals to a reference amplitude or repetition rate. One use for the comparison-measurement technique is to facilitate calibration of equipment (e.g., on an assembly-line test) where the desired amplitude or repetition rate does not produce an exact number of divisions of deflection. The adjustment will be easier and more accurate if arbitrary units of measurement are established so that correct adjustment is indicated by an exact number of divisions of deflection. Arbitrary sweep rates can be useful for comparing harmonic signals to a fundamental frequency, or for comparing the repetition rate of the input and output pulses in a digital count-down circuit. The following procedure describes how to establish arbitrary units of measure for comparison measurements. Although the procedure for establishing vertical and horizontal arbitrary units of measurement is much the same, both processes are described in detail.

Vertical Deflection Factor. To establish an arbitrary vertical deflection factor based upon a specific reference amplitude, proceed as follows:

1. Connect the reference signal to the INPUT connector. Set the TIME/DIV switch to display several cycles of the signal.

2. Set the VOLTS/DIV switch and the Variable VOLTS/DIV control to produce a display an exact number of graticule divisions in amplitude. Do not change the Variable VOLTS/DIV control after obtaining the desired deflection. This display can be used as a reference for amplitude comparison measurements.

3. To establish an arbitrary vertical deflection factor so the amplitude of an unknown signal can be measured accurately at any setting of the VOLTS/DIV switch, the amplitude of the reference signal must be known. If it is not known, it can be measured before the Variable VOLTS/DIV control is set in step 2.

4. Divide the amplitude of the reference signal (volts) by the product of the vertical deflection established in step 2 (divisions) and the setting of the VOLTS/DIV switch. This is the vertical conversion factor.

$$\text{Vertical Conversion Factor} = \frac{\text{reference signal amplitude (volts)}}{\text{vertical deflection (divisions)} \times \text{VOLTS/DIV switch setting}}$$

5. To measure the amplitude of an unknown signal, disconnect the reference signal and connect the unknown signal to the input connector. Set the VOLTS/DIV switch to a setting that provides sufficient vertical deflection to make an accurate measurement. Do not readjust the Variable VOLTS/DIV control.

6. Measure the vertical deflection in divisions and calculate the amplitude of the unknown signal using the following formula:

$$\text{Signal Amplitude} = \text{VOLTS/DIV switch setting} \times \text{vertical conversion factor} \times \text{vertical deflection (divisions)}$$

EXAMPLE. Assume a reference signal amplitude of 30 volts, a VOLTS/DIV switch setting of 5 V, and the Variable VOLTS/DIV control is adjusted to provide a vertical deflection of four divisions.

Substituting these values in the vertical conversion factor formula (step 4):

$$\text{Vertical Conversion Factor} = \frac{30\text{ V}}{4 \times 5\text{ V}} = 1.5$$

Then, with a VOLTS/DIV switch setting of 10, the peak-to-peak amplitude of an unknown signal which produces a vertical deflection of five divisions can be determined by using the signal amplitude formula (step 6):

$$\text{Signal Amplitude} = 10\text{ V} \times 1.5 \times 5 = 75\text{ volts}$$

Sweep Rates. To establish an arbitrary horizontal sweep rate based upon a specific reference frequency, proceed as follows:

1. Connect the reference signal to the INPUT connector. Set the VOLTS/DIV switch for four or five divisions of vertical deflection.

2. Set the TIME/DIV switch and the Variable TIME/DIV control so one cycle of the signal covers an exact number of horizontal divisions. Do not change the Variable TIME/DIV control after obtaining the desired deflection. This display can be used as a reference for frequency comparison measurements.

3. To establish an arbitrary sweep rate so the repetition rate of an unknown signal can be measured accurately at any setting of the TIME/DIV switch, the repetition rate of the reference signal must be known. If it is not known, it can be measured before the Variable TIME/DIV control is set in step 2.

4. Divide the repetition rate of the reference signal (seconds) by the product of the horizontal deflection established in step 2 (divisions) and the setting of the TIME/DIV switch. This is the horizontal conversion factor.

$$\text{Horizontal Conversion Factor} = \frac{\text{reference signal repetition rate (seconds)}}{\text{horizontal deflection (divisions)} \times \text{TIME/DIV switch setting}}$$

5. To measure the repetition rate of an unknown signal, disconnect the reference signal and connect the unknown signal to the input connector. Set the TIME/DIV switch to a setting that provides sufficient horizontal deflection to make an accurate measurement. Do not readjust the Variable TIME/DIV control.

6. Measure the horizontal deflection in divisions and calculate the repetition rate of the unknown signal using the following formula:

$$\text{Repetition Rate} = \text{TIME/DIV switch setting} \times \text{horizontal conversion factor} \times \text{horizontal deflection (divisions)}$$

EXAMPLE. Assume a reference signal frequency of 455 hertz (repetition rate 2.19 milliseconds), and a TIME/DIV switch setting of .2 ms, with the Variable TIME/DIV control adjusted to provide a horizontal deflection of eight divisions. Substituting these values in the horizontal conversion factor formula (step 4):

$$\text{Horizontal Conversion Factor} = \frac{2.19\text{ milliseconds}}{.2 \times 8} = 1.37$$

Then, with a TIME/DIV switch setting of 50 μs, the repetition rate of an unknown signal which completes one cycle in seven horizontal divisions can be determined by using the repetition rate formula (step 6):

$$\text{Repetition Rate} = 50\,\mu\text{s} \times 1.37 \times 7 = 480\,\mu\text{s}$$

This answer can be converted to frequency by taking the reciprocal of the repetition rate (see application on Determining Frequency).

Time Duration Measurements

To measure time between two points on a waveform, use the following procedure:

1. Connect the signal to one of the input connectors.

2. Set the Vertical Mode switch to display the channel used.

3. Set the VOLTS/DIV switch to display about four divisions of the waveform.

4. Set the TRIGGERING controls to obtain a stable display.

5. Set the TIME/DIV switch to the fastest sweep rate that displays less than eight divisions between the time measurement points (see Fig. 2-9).

6. Adjust the vertical POSITION control to move the points between which the time measurement is made to the center horizontal line.

7. Adjust the horizontal POSITION control to center the time-measurement points within the center eight divisions of the graticule.

8. Measure the horizontal distance between the time measurement points. Be sure the Variable TIME/DIV control is set to CAL.

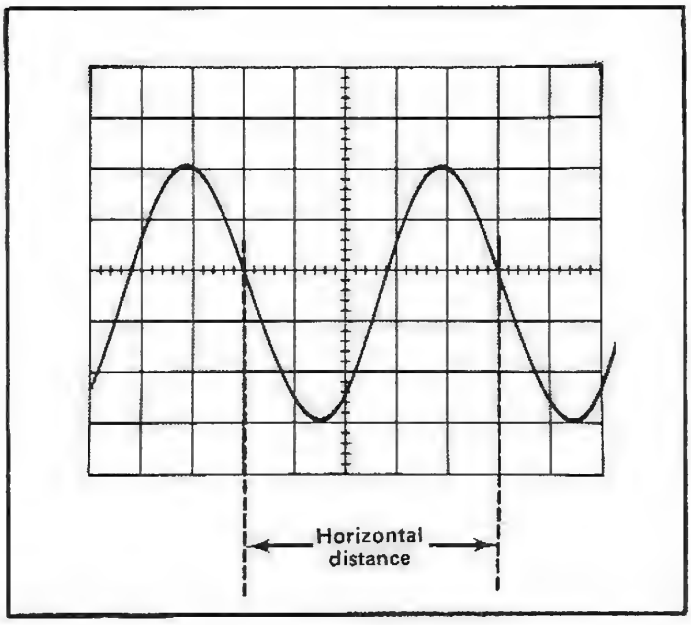

Fig. 2-9. Measuring time duration between points on a waveform.

9. Multiply the distance measured in step 8 by the setting of the TIME/DIV switch.

EXAMPLE. Assume that the horizontal distance between the time measurement points is five divisions (see Fig. 2-9) and the TIME/DIV switch is set to .1 ms.

Using the formula:

$$\text{Time Duration} = \begin{matrix}\text{horizontal}\\ \text{distance}\\ \text{(divisions)}\end{matrix} \times \begin{matrix}\text{TIME/DIV}\\ \text{setting}\end{matrix}$$

Substituting the given values:

$$\text{Time Duration} = 5 \times 0.1 \text{ ms}$$

The time duration is 0.5 millisecond.

Determining Frequency

The time measurement technique can also be used to determine the frequency of a signal. The frequency of a periodically recurrent signal is the reciprocal of the time duration (period) of one cycle.

Use the following procedure:

1. Measure the time duration of one cycle of the waveform as described in the previous application.

2. Take the reciprocal of the time duration to determine the frequency.

EXAMPLE. The frequency of the signal shown in Fig. 2-9, which has a time duration of 0.5 millisecond, is:

$$\text{Frequency} = \frac{1}{\text{time duration}} = \frac{1}{0.5 \text{ ms}} = 2 \text{ kHz}$$

Risetime Measurements

Risetime measurements employ basically the same techniques as time-duration measurements. The main difference is the points between which the measurement is made. The following procedure gives the basic method of measuring risetime between the 10% and 90% points of the waveform.

1. Connect the signal to either input connector.

2. Set the Vertical Mode switch to display the channel used.

3. Set the VOLTS/DIV switch and Variable control to produce a display exactly six divisions in amplitude.

4. Center the display about the center horizontal line with the vertical POSITION control.

5. Set the TRIGGERING controls to obtain a stable display.

6. Set the TIME/DIV switch to the fastest sweep rate that will display less than eight divisions between the 10% and 90% points on the waveform.

7. Adjust the horizontal POSITION control to move the 10% point of the waveform to the second vertical line of the graticule (see Fig. 2-10).

8. Measure the horizontal distance between the 10% and 90% points. Be sure the Variable TIME/DIV control is set to CAL.

9. Multiply the distance measured in step 8 by the setting of the TIME/DIV switch.

EXAMPLE. Assume that the horizontal distance between the 10% and 90% points is six divisions (see Fig. 2-10) and the TIME/DIV switch is set to 1 μs.

Using the time duration formula to find risetime:

$$\text{Time Duration (Risetime)} = \text{horizontal distance (divisions)} \times \text{TIME/DIV setting}$$

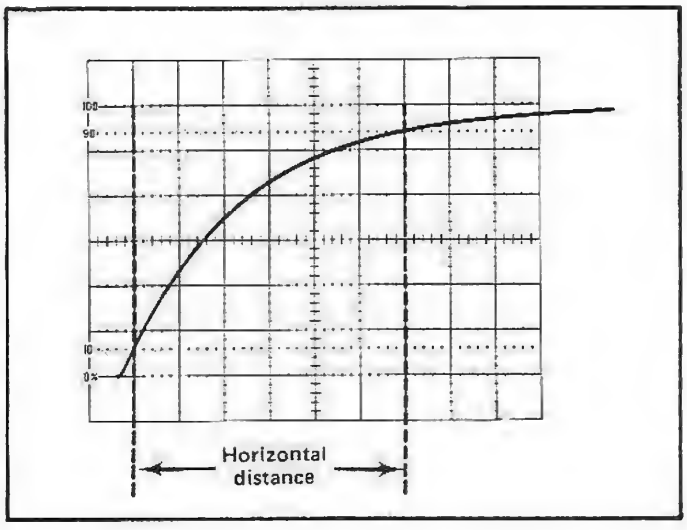

Fig. 2-10. Measuring risetime.

Substituting the given values:

$$\text{Risetime} = 6 \times 1\ \mu s$$

The risetime is 6 microseconds.

Time Difference Measurements

The calibrated sweep rate and dual-trace features of the 434 allow measurement of time difference between two separate events. To measure time difference use the following procedure:

1. Set the Input Coupling switches to the same position, depending on the type of coupling desired.

2. Set the Vertical Mode switch to either CHOP or ALT. In general, CHOP is more suitable for low-frequency signals and the ALT position is more suitable for high-frequency signals. More information on determining the mode is given under Dual-Trace Operation in this section.

3. Set the TRIGGER SOURCE switch to CH 1.

4. Connect the reference signal to the CH 1 connector and the comparison signal to the CH 2 connector. The reference signal should precede the comparison signal in time. Use coaxial cables or probes which have equal time delay to connect the signals to the input connectors.

5. If the signals are of opposite polarity, set the INVERT switch out to invert the Channel 2 display (signals may be of opposite polarity due to 180° phase difference; if so, take this into account in the final calculation).

6. Set the VOLTS/DIV switches to produce four or five division displays.

7. Set the TRIGGER LEVEL control for a stable display.

8. If possible, set the TIME/DIV switch for a sweep rate which shows three or more divisions between the two waveforms.

9. Adjust the vertical POSITION controls to center each waveform (or the points on the display between which the measurement is being made) in relation to the center horizontal line.

10. Adjust the horizontal POSITION control so the Channel 1 (reference) waveform crosses the center horizontal line at a vertical graticule line.

11. Measure the horizontal distance between the Channel 1 waveform and the Channel 2 waveform (see Fig. 2-11).

12. Multiply the measured distance by the setting of the TIME/DIV switch.

EXAMPLE. Assume that the TIME/DIV switch is set to 50 μs and the horizontal distance between waveforms is 4.5 divisions (see Fig. 2-11).

Using the formula:

$$\text{Time Delay} = \text{TIME/DIV setting} \times \text{horizontal distance (divisions)}$$

Substituting the given values:

$$\text{Time Delay} = 50\ \mu s \times 4.5$$

The time delay is 225 microseconds.

Multi-Trace Phase Difference Measurements

Phase comparison between two signals of the same frequency can be made using the dual-trace feature of the 434. This method of phase difference measurement can be used up to the frequency limit of the vertical system. To make the comparison, use the following procedure.

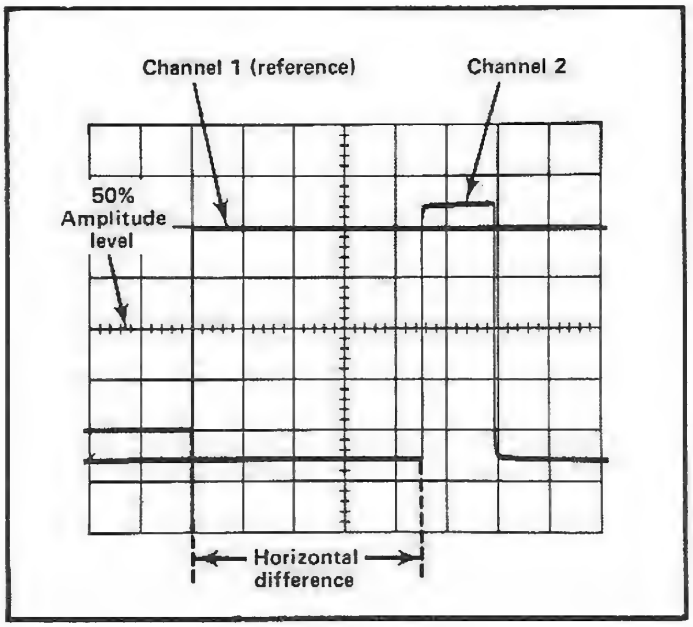

Fig. 2-11. Measuring time difference between two pulses.

1. Set the Input Coupling switches to the same position, depending on the type of coupling desired.

2. Set the Vertical Mode switch to either CHOP or ALT. In general, CHOP is more suitable for low-frequency signals and the ALT position is more suitable for high-frequency signals. More information on determining the mode is given under Dual-Trace Operation in this section.

3. Set the TRIGGER SOURCE switch to CH 1.

4. Connect the reference signal to the CH 1 connector and the comparison signal to the CH 2 connector. The reference signal should precede the comparison signal in time. Use coaxial cables or probes which have similar time delay characteristics to connect the signals to the input connectors.

5. If the signals are of opposite polarity, set the INVERT switch out to invert the Channel 2 display. (Signals may be of opposite polarity due to 180° phase difference; if so, take this into account in the final calculation.)

6. Set the VOLTS/DIV switches and the Variable VOLTS/DIV controls so the displays are equal and about five divisions in amplitude.

7. Set the TRIGGER controls to obtain a stable display.

8. Set the TIME/DIV switch to a sweep rate which displays about one cycle of the waveform.

9. Move the waveforms to the center of the graticule with the vertical POSITION controls.

10. Turn the Variable TIME/DIV control until one cycle of the reference signal (Channel 1) occupies exactly eight divisions between the second and tenth vertical lines of the graticule (see Fig. 2-12). Each division of the graticule represents 45° of the cycle (360° ÷ 8 divisions = 4°/division). The sweep rate can be stated in terms of degrees as 45°/division.

11. Measure the horizontal difference between corresponding points on the waveforms.

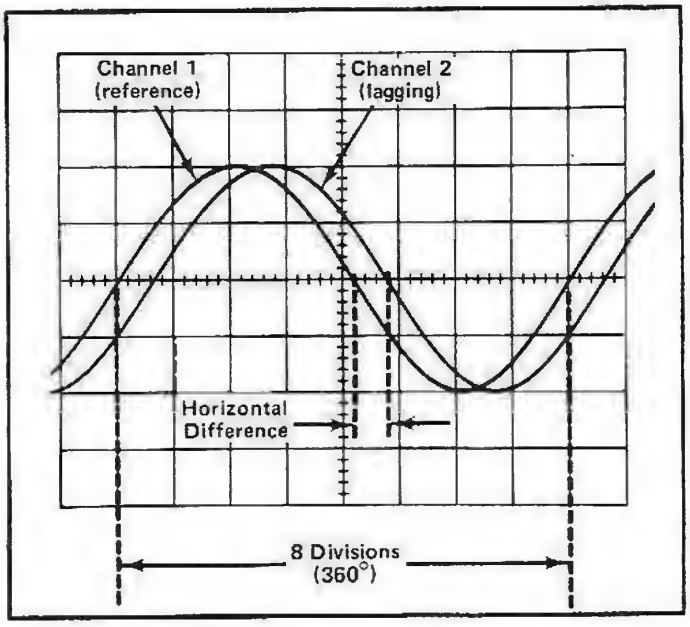

Fig. 2-12. Measuring phase difference.

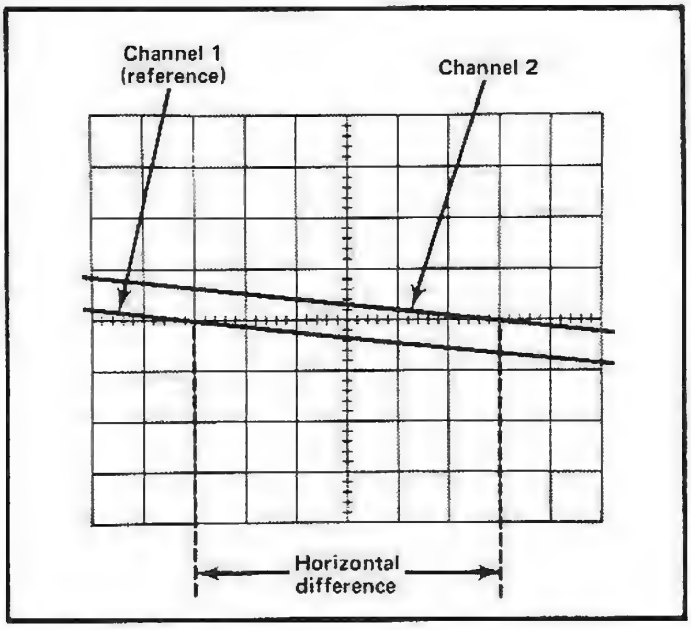

Fig. 2-13. High resolution phase-difference measurement with increased sweep rate.

12. Multiply the measured distance (in divisions) by 45°/division (sweep rate) to obtain the exact amount of phase difference.

EXAMPLE. Assume a horizontal difference of 0.6 division with a sweep rate of 45°/division as shown in Fig. 2-12.

Using the formula:

$$\text{Phase Difference} = \text{horizontal difference (divisions)} \times \text{sweep rate (degrees/div)}$$

Substituting the given values:

$$\text{Phase Difference} = 0.6 \times 45^\circ$$

The phase difference is 27°.

High Resolution Phase Measurements

More accurate dual-trace phase measurements can be made by increasing the sweep rate (without changing the Variable TIME/DIV control setting). One of the easiest ways to increase the sweep rate is with the MAG switch. The magnified sweep rate (in terms of degrees/division) is determined by dividing the sweep rate obtained previously by the amount of sweep magnification.

EXAMPLE. If the sweep rate were increased 10 times with the magnifier, the magnified sweep rate would be 45°/division ÷ 10 = 4.5°/division. Fig. 2-13 shows the same signals as used in Fig. 2-12 but with the MAG switch set for 10X magnification. With a horizontal difference of six divisions, the phase difference is:

$$\text{Phase Difference} = \text{Horizontal difference (divisions)} \times \text{magnified sweep rate (degrees/div)}$$

Substituting the given values:

$$\text{Phase Difference} = 6 \times 4.5^\circ.$$

The phase difference is 27°.

Common-Mode Rejection

The ADD feature of the 434 can be used to display signals which contain undesirable components. These undesirable components can be eliminated through common-mode rejection. The precautions given under Algebraic Addition should be observed.

1. Connect the signal containing both the desired and undesired information to the CH 1 connector.

2. Connect a signal similar to the unwanted portion of the Channel 1 signal to the CH 2 connector. For example, in Fig. 2-14, a line-frequency signal is connected to Channel 2 to cancel out the line-frequency component of the Channel 1 signal.

3. Set both Input Coupling switches to DC (AC if DC component of input signal is too large).

4. Set the Vertical Mode switch to ALT. Set the VOLTS/DIV switches so the signals are about equal in amplitude.

5. Set the TRIGGER SOURCE switch to COMP.

6. Set the Vertical Mode switch to ADD. Set the INVERT switch so the common-mode signals are of opposite polarity.

7. Adjust the Channel 2 VOLTS/DIV switch and Variable VOLTS/DIV control for maximum cancellation of the common-mode signal.

8. The signal which remains should be only the desired portion of the Channel 1 signal. The undesired signal is cancelled out.

EXAMPLE. An example of this mode of operation is shown in Fig. 2-14. The signal applied to Channel 1 contains unwanted line-frequency components (Fig. 2-14A). A corresponding line-frequency signal is connected to Channel 2 (Fig. 2-14B). Fig. 2-14C shows the desired portion of the signal as displayed when common-mode rejection is used.

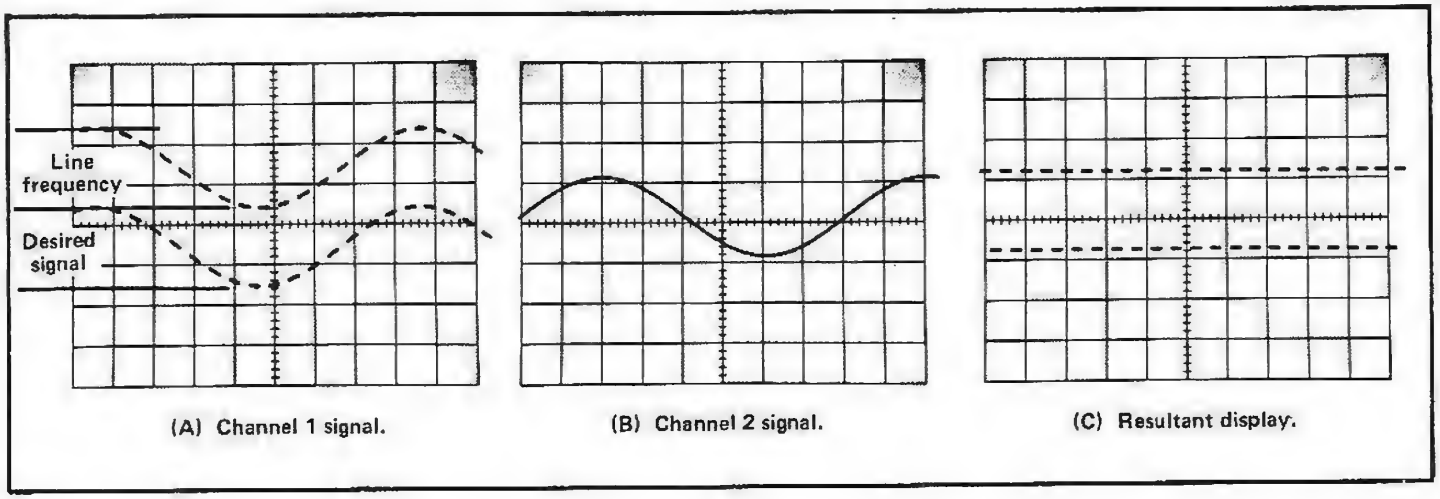

Fig. 2-14. Using the ALG ADD feature for common-mode rejection. (A) Channel 1 signal contains desired information along with line-frequency component. (B) Channel 2 signal contains line-frequency only, (C) resultant CRT display using common-mode rejection.

SECTION 3
CIRCUIT DESCRIPTION

Change information, if any, affecting this section will be found at the rear of the manual.

Introduction

This section of the manual contains a description of the circuitry used in the 434 Oscilloscope. The description begins with a discussion of the instrument using the basic block diagram shown in Fig. 3-1. Then, each circuit is described in detail, using a detailed block diagram to show the interconnections between the stages in each major circuit and the relationship of the front-panel controls to the individual stages.

A complete block diagram is located in the Diagrams section at the rear of this manual. This block diagram shows the overall relationship between all of the circuits. Complete schematics of each circuit are also given in the Diagrams section. Refer to these diagrams throughout the following circuit description for electrical values and relationship.

BLOCK DIAGRAM

General

The following discussion is provided to aid in understanding the overall concept of the 434 before the individual circuits are discussed in detail. A basic block diagram of the 434 is shown in Fig. 3-1. Only the basic interconnections between the individual blocks are shown on this diagram. Each block represents a major circuit within this instrument. The number on each block refers to the complete circuit diagram which is located at the rear of this manual.

Signals to be displayed on the CRT are applied to the CH 1 and/or CH 2 input connectors. The input signals are then amplified by the Channel 1 Input Amp and Preamp and/or the Channel 2 Input Amp and Preamp circuits. Each vertical circuit includes separate vertical deflection factor, position, input coupling, gain, variable attenuation, and balance controls. A sample of the Channel 1 signal is supplied to the Trigger Pickoff circuit. The Channel 2 Preamp circuit contains an invert feature to invert the Channel 2 signal as displayed on the CRT. The output of both Vertical Preamp circuits is connected to the Channel Switch circuit. This circuit selects the channel(s) to be displayed. An output signal from this circuit is connected to the Z Axis Amplifier circuit to blank out the between-channel switching transients when in the chopped mode of operation. A sample of the signal present in the Channel Switch circuit is supplied to the Trigger Pickoff circuit.

The output of the Channel Switch circuit is connected to the Vertical Output Amplifier through the Delay Line. The Vertical Output Amplifier circuit provides the final amplification for the signal before it is connected to the vertical deflection plates of the CRT. This circuit includes the BEAM FINDER switch which compresses the vertical and horizontal deflection within the viewing area to aid in locating an off-screen display.

The Trigger Pickoff and Generator circuit selects a trigger signal (determined by the TRIGGER SOURCE switch) and produces an output pulse which initiates the sweep signal produced by the Sweep Generator circuit. The internal trigger signal is selected from the Channel 1 circuit or the Channel Switch circuit. A sample of the line voltage applied to the instrument or an external signal applied to the EXT TRIG input connector can also be used to generate a sweep-starting pulse. The trigger circuit contains level, slope, coupling, and source controls.

The Sweep Generator circuit produces a linear sawtooth output signal when initiated by the Trigger Generator circuit. The slope of the sawtooth produced by the Sweep Generator circuit is controlled by the TIME/DIV switch. The operating mode of the Sweep Generator circuit is controlled by the sweep MODE switch. In the AUTO mode of operation, the absence of an adequate trigger signal causes the sweep to free run. In the NORM mode, a horizontal sweep is presented only when correctly triggered by an adequate trigger signal. The SINGLE SWEEP mode of operation allows one (and only one) sweep to be initiated after the circuit is reset with the RESET button. The Sweep Generator also produces an unblanking gate signal to unblank the CRT so the display can be presented. This gate signal is coincident with the sawtooth produced by the Sweep Generator circuit. Additionally, the Sweep Generator circuit produces an alternate trace sync pulse which is connected to the Channel Switch circuit. This pulse switches the display between channels at the end of each sweep when in the ALT mode of operation.

The output of the Sweep Generator circuit is amplified by the Horizontal Amplifier circuit to produce horizontal deflection for the CRT in all positions of the TIME/DIV switch except EXT HORIZ. This circuit contains a six-position magnifier switch to increase the sweep rate up to a maximum of 50 times. Other horizontal deflection signals can be connected to the Horizontal Amplifier by using the

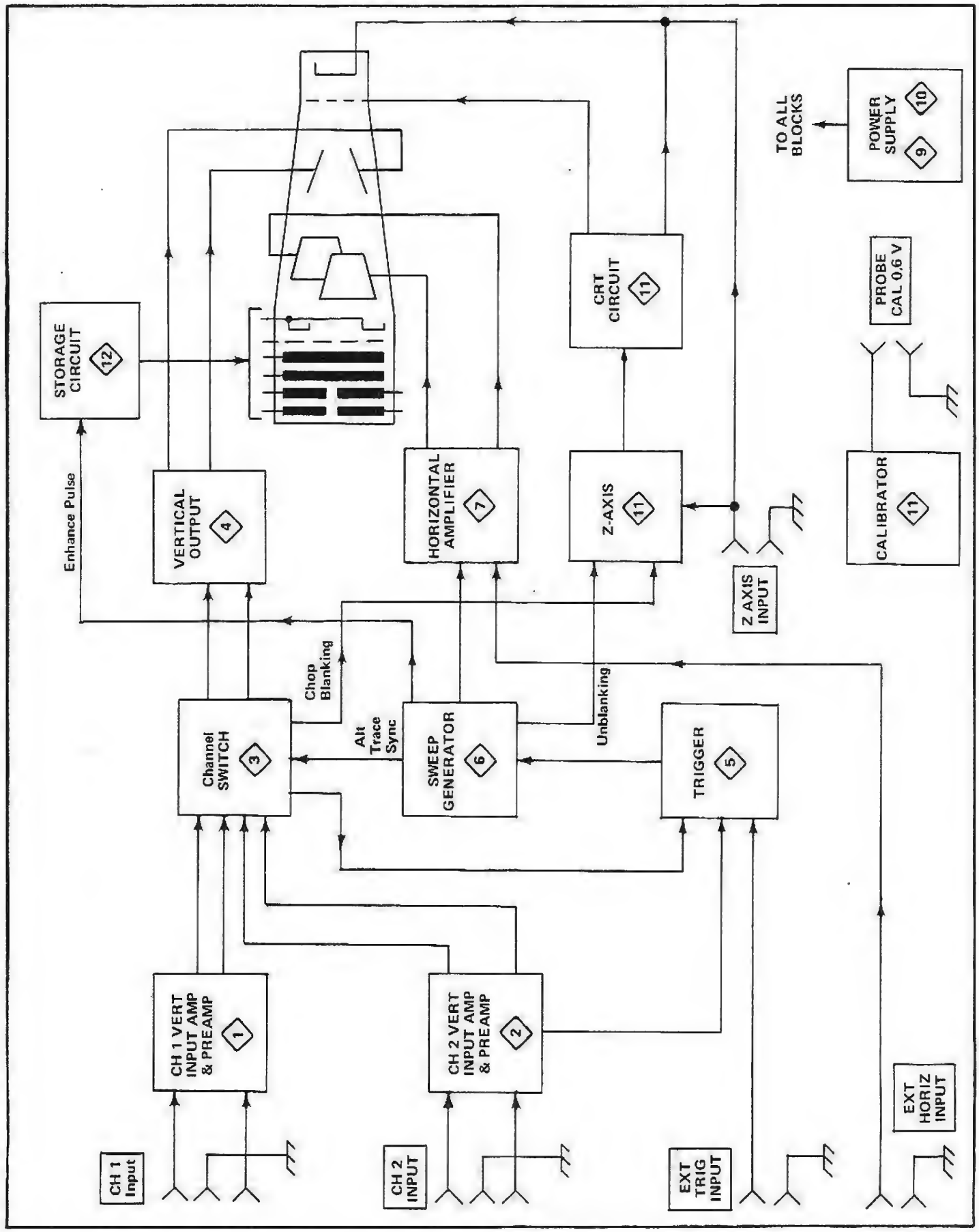

Fig. 3-1. Basic block diagram of the 434.

EXT HORIZ mode of operation. When the TIME/DIV switch is set to EXT HORIZ, the X signal is connected to the Horizontal Amplifier circuit via the EXT HORIZ input connector on the instrument rear panel.

The CRT circuit determines the CRT intensity by summing the signal inputs from the INTENSITY control, Channel Switch circuit (chopped blanking), Sweep Generator (unblanking), and the Z AXIS input connector. The CRT circuit also contains the controls necessary for operation of the cathode-ray tube. Trace storage is accomplished by the Storage circuit.

The Power Supply circuit provides all the voltages necessary for operation of this instrument. The Calibrator circuit provides a square-wave output with accurate amplitude and frequency which can be used to check the calibration of the instrument and the compensation of probes.

CIRCUIT OPERATION

General

This section provides a detailed description of the electrical operation and relationship of the circuits in the 434. The theory of operation for circuits unique to this instrument is described in detail in this discussion. Circuits which are commonly used in the electronics industry are not described in detail. If more information is desired on these commonly used circuits, refer to the following textbooks:

Tektronix Circuit Concepts Books (order from your local Tektronix Field Office or representative).

Cathode-Ray Tubes, Tektronix Part No. 062-0852-01.

Horizontal Amplifier Circuits, Tektronix Part No. 062-1144-00.

Oscilloscope Trigger Circuits, Tektronix Part No. 062-1056-00.

Power Supply Circuits, Tektronix Part No. 062-0888-01.

Sweep Generator Circuits, Tektronix Part No. 062-1098-01.

Vertical Amplifier Circuits, Tektronix Part No. 062-1145-00.

Phillip Cutler, "Semiconductor Circuit Analysis", McGraw-Hill, New York, 1964.

Lloyd P. Hunter (Ed.), "Handbook of Semiconductor Electronics", second edition, McGraw-Hill, New York, 1962.

Jacob Millman and Herbert Taub, "Pulse, Digital, and Switching Waveforms", McGraw-Hill, New York, 1965.

The following circuit analysis is written around the detailed block diagrams which are given for each major circuit. These detailed block diagrams give the names of the individual stages within the major circuits and show how they are connected together to form the major circuit. The block diagrams also show the inputs and outputs for each circuit and the relationship of the front-panel controls to the individual stages. The circuit diagrams from which the detailed block diagrams are derived are shown in the Diagrams section.

CHANNEL 1 INPUT AMP AND PREAMP

General

Input signals for vertical deflection on the CRT can be connected to the CH 1 connector. The Channel 1 Input Amp and Preamp circuits provide control of input coupling, vertical deflection factor, balance, vertical position, and vertical gain. A sample of the Channel 1 input signal is also provided to the Trigger Pickoff and Generator circuit to provide internal triggering from the Channel 1 signal only. Fig. 3-2 shows a detailed block diagram of the Channel 1 Input Amp and Preamp circuits. A schematic of these circuits is shown on diagram 1 at the rear of the manual.

Input Coupling

Input signals applied to the CH 1 connector can be AC-coupled, DC-coupled, or internally disconnected. When Input Coupling switch S8A is in the DC position, the input signal is coupled directly to the Input Attenuator circuit. In the AC position, the input signal passes through capacitor C8. This capacitor prevents the DC component of the signal from passing to the amplifier. When the GND pushbutton is pressed in, switch S8B opens the signal path and the input to the amplifier is connected to ground. This provides a ground reference without the need to disconnect the applied signal from the CH 1 input connector. Resistor R8 allows C8 to be precharged so the trace remains on screen when switched to AC coupling with a high DC level applied. Variable capacitor C9 adjusts the basic input time constant for a nominal value of one megohm X 24 picofarads.

Input Attenuator

The effective overall Channel 1 deflection factor of the 434 is determined by the CH 1 VOLTS/DIV switch. In all positions of the CH 1 VOLTS/DIV switch above 5 mV, the basic deflection factor of the Vertical Deflection System is 10 millivolts per division of CRT deflection. To increase this basic deflection factor to the values indicated by the VOLTS/DIV switch, precision attenuators are switched into the circuit. In the 1, 2, 5, and 10 mV positions, input attenuation is not used. Instead, the gain of the Preamp

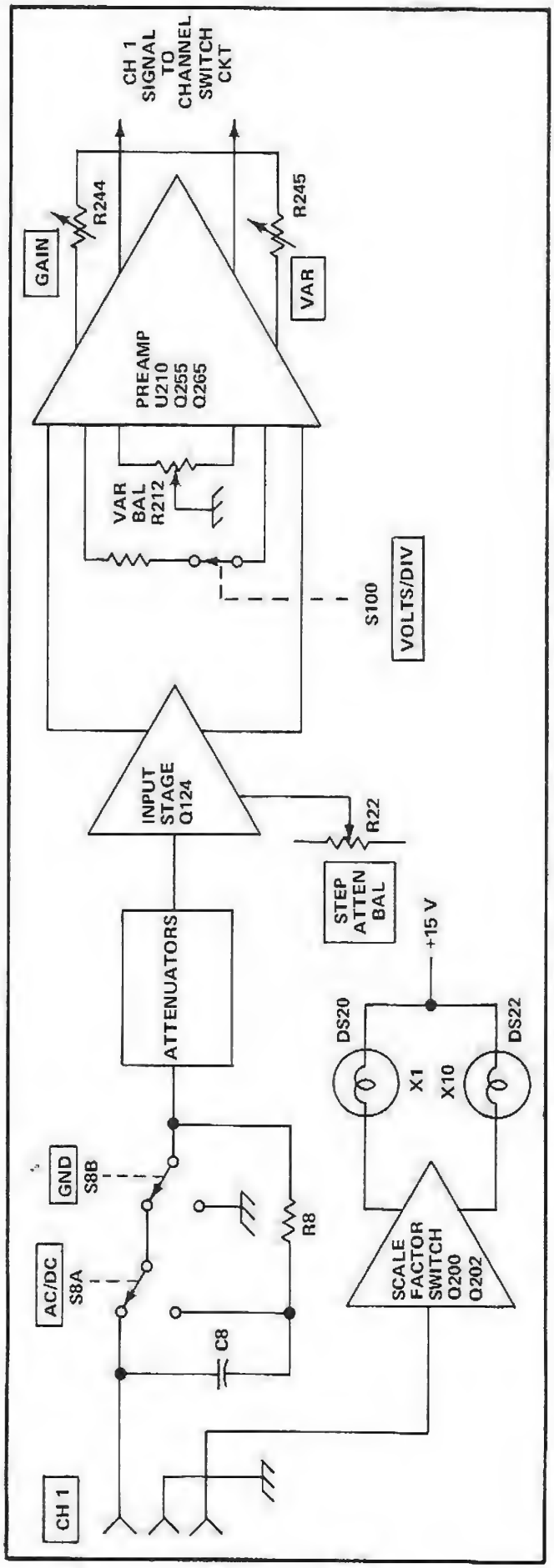

Fig. 3-2. Channel 1 Input Amp and Preamp detailed block diagram.

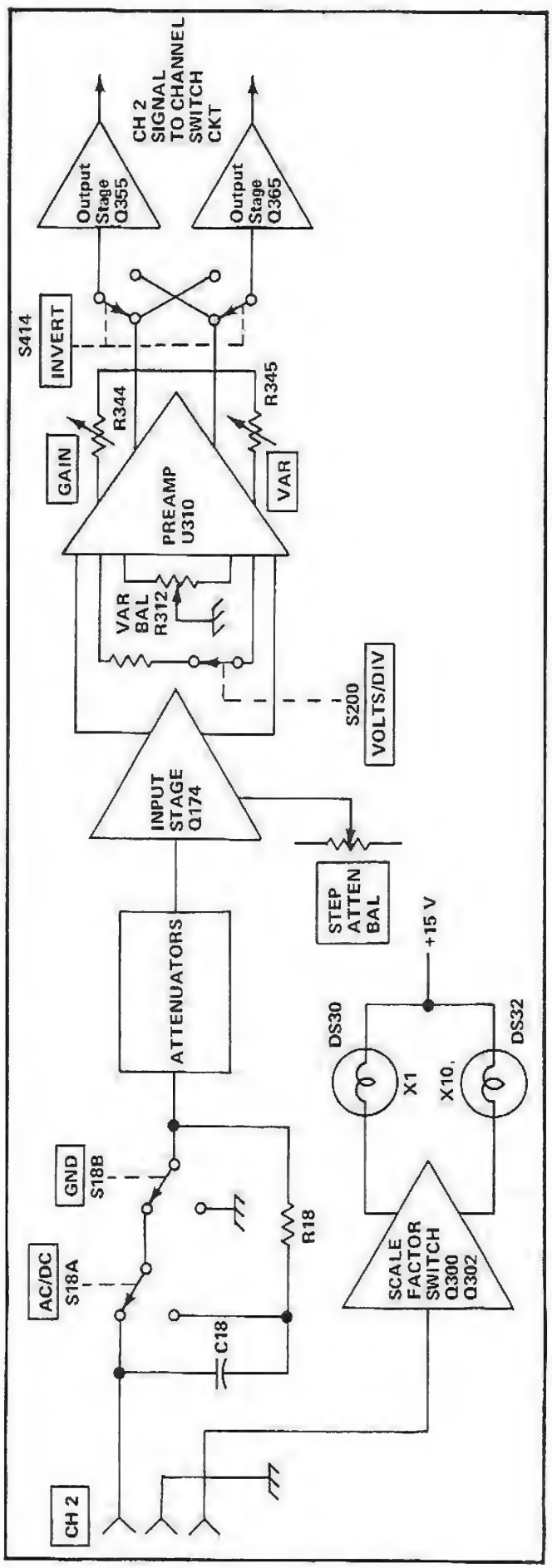

Fig. 3-3. Channel 2 Input Amp and Preamp detailed block diagram.

Circuit is changed to decrease the deflection factor (see Preamp Circuit discussion).

For the CH 1 VOLTS/DIV switch positions above 10 mV, the attenuators are switched into the circuit singly or in pairs to produce the vertical deflection factor indicated by the VOLTS/DIV switch. These attenuators are frequency-compensated voltage dividers. In addition to providing constant attenuation at all frequencies within the bandwidth of the instrument, the Input Attenuators are designed to maintain the same input RC characteristics (one megohm X 24 picofarads) for each setting of the CH 1 VOLTS/DIV switch. Each attenuator contains an adjustable series capacitor to provide correct attenuation at high-frequencies and an adjustable shunt capacitor to provide correct input capacitance.

NOTE

Each attenuator is a hybrid encapsulated assembly; therefore, replacement of individual components is not possible. Should defects occur, the attenuator must be replaced as a unit.

Scale-Factor Switching Circuit

The vertical deflection factor of Channel 1 is indicated by back-lighting the appropriate figures imprinted on the flange of the CH 1 VOLTS/DIV knob. When a X1 probe is connected to the CH 1 input connector, the base of Q200 is connected to +15 volts through R200. Q200 is biased into saturation and conducts current through indicator DS20. DS20 indicates the correct deflection factors for X1 probes. When Q200 conducts, the voltage level at its collector is very close to zero volts; therefore, there is insufficient bias at the base of Q202 to cause it to conduct, and X10 indicator DS22 remains dark.

When a X10 probe with a scale factor switching connector is attached to the CH 1 input connector, the base of Q200 is grounded. Q200 does not conduct, and its collector rises to approximately +15 volts. X1 indicator DS20 is dark and Q202 is forward biased into conduction. Q202 conducts current through X10 indicator DS22, which now indicates the correct vertical deflection factor, including the X10 attenuation ratio of the attached probe.

Input Stage

The Channel 1 signal from the Input Attenuator is connected to the Input Stage through C121, R121, and R122. R120 provides the input resistance for this stage. R121 limits the current drive to the gate of Q124A. Dual-diode CR122 protects the circuit by clamping the gate of Q124A at about −15.5 or +15.5 volts if a high-amplitude signal is applied to the CH 1 connector. FET Q124B is a relatively constant current source for Q124A, and also provides temperature compensation of Q124A. R125 isolates the input of the Preamp Stage from the source of Q124A.

Preamp Stage

The Preamp Stage U210 is a multiple-stage integrated circuit amplifier. Adjusting the gain of this stage sets the overall gain for Channel 1. Basic gain of the amplifier is set by adjusting R244. VAR control R245 permits continuously variable uncalibrated deflection factors between the calibrated settings of the VOLTS/DIV switch. R212 adjusts for no base line shift of the CRT display when rotating the VAR control.

In the 1, 2, 5, and 10 mV positions of the VOLTS/DIV switch no attenuation is used in the Input Attenuator stage. The correct vertical deflection factors are obtained by changing the gain of the Channel 1 Preamp Stage. This is accomplished by changing the value of the gain-setting resistance connected between pins 7 and 8 of U210. The STEP ATTEN BAL screwdriver adjustment R22 located on the instrument front panel adjusts for no baseline shift of a CRT display when switching between the 1, 2, 5, and 10 mV positions of the CH 1 VOLTS/DIV switch.

Variable capacitors C217, C220, C223, C225, and C226 are compensation adjustments to provide optimum high-frequency response through the channel amplifier. A sample of the signal being amplified in Channel 1 is taken from pin 19 of U210 and connected to the Trigger Pickoff and Generator circuit to allow Channel 1 only triggering operation. Q255 and Q265 in the Output Amplifier stage are connected as common-base amplifiers to provide low input impedance load for the Preamp Stage. They also provide isolation between the Preamp Stage and the Channel Switch circuitry.

CHANNEL 2 INPUT AMP AND PREAMP

General

The Channel 2 Input Amp and Preamp circuits are basically the same as the Channel 1 Input Amp and Preamp circuits. Only the differences between the two circuits are described here. Portions of this circuit not described in the following description operate in the same manner as for the Channel 1 Input Amp and Preamp. Fig. 3-3 shows a detailed block diagram of the Channel 2 Input Amp and Preamp. A schematic of these circuits is shown on diagram 2 at the rear of this manual.

Preamp Stage

Basically the Channel 2 Preamp Stage operates as described for Channel 1. However, the Channel 2 Preamp

stage does not make available a sample of the Channel 2 signal for triggering use. Also, INVERT switch S414 has been added in the Channel 2 circuit. This switch allows the displayed signal from Channel 2 to be inverted.

CHANNEL SWITCH

General

The Channel Switch circuit determines whether the CH 1 and/or CH 2 Vertical Preamp output signal is connected to the Vertical Output Amplifier circuit. In the ALT and CHOP modes of operation, both channels are alternately displayed on a shared-time basis. Fig. 3-4 shows a detailed block diagram of the Channel Switch circuit. A schematic of this circuit is shown on diagram 3 at the rear of this manual.

Diode Gate

The Diode Gates, consisting of four diodes each, can be thought of as switches which allow either of the Vertical Preamp output signals to be coupled to the Delay-Line Driver stage. CR404, CR405, CR406, and CR408 control the Channel 1 signal output, and CR410, CR411, CR412, and CR414 control the Channel 2 signal output. These diodes are in turn controlled by the Switching Multivibrator for dual-trace displays, or by the Vertical Mode switch for single-trace displays.

CH 1. In the CH 1 mode of operation, −15 volts is applied to the junction of CR411-CR412 in the Channel 2 Diode Gate through Vertical Mode switch S45A, R427, and CR433 (see simplified diagram in Fig. 3-5). This forward biases CR411-CR412 and reverse biases CR410-CR414, since the input to the Delay-Line Driver Stage is at about +6 volts. CR410-CR414 block the Channel 2 signal so it cannot pass to the Delay-Line Driver stage. At the same time in the Channel 1 Diode Gate, CR405-CR406 are connected to +15 volts through R420. CR405-CR406 are held reverse biased, while CR404-CR408 are forward biased. Therefore, the Channel 1 signal can pass to the Delay-Line Driver stage.

CH 2. In the CH 2 mode of operation, the above conditions are reversed. CR405-CR406 are connected to −15 volts through S45E, R429, and CR431, and CR411-CR412 are connected to +15 volts through R425 (see simplified diagram in Fig. 3-6). The Channel 1 Diode Gate blocks the signal, and the Channel 2 Diode Gate allows it to pass.

Switching Multivibrator

ALT. In this mode of operation, the Switching Multivibrator operates as a bistable multivibrator. −15 volts is connected to the emitter of Q435 (Alternate Trace Switching Amplifier stage) through R437. Q435 is forward biased and supplies current to the "on" transistor in the

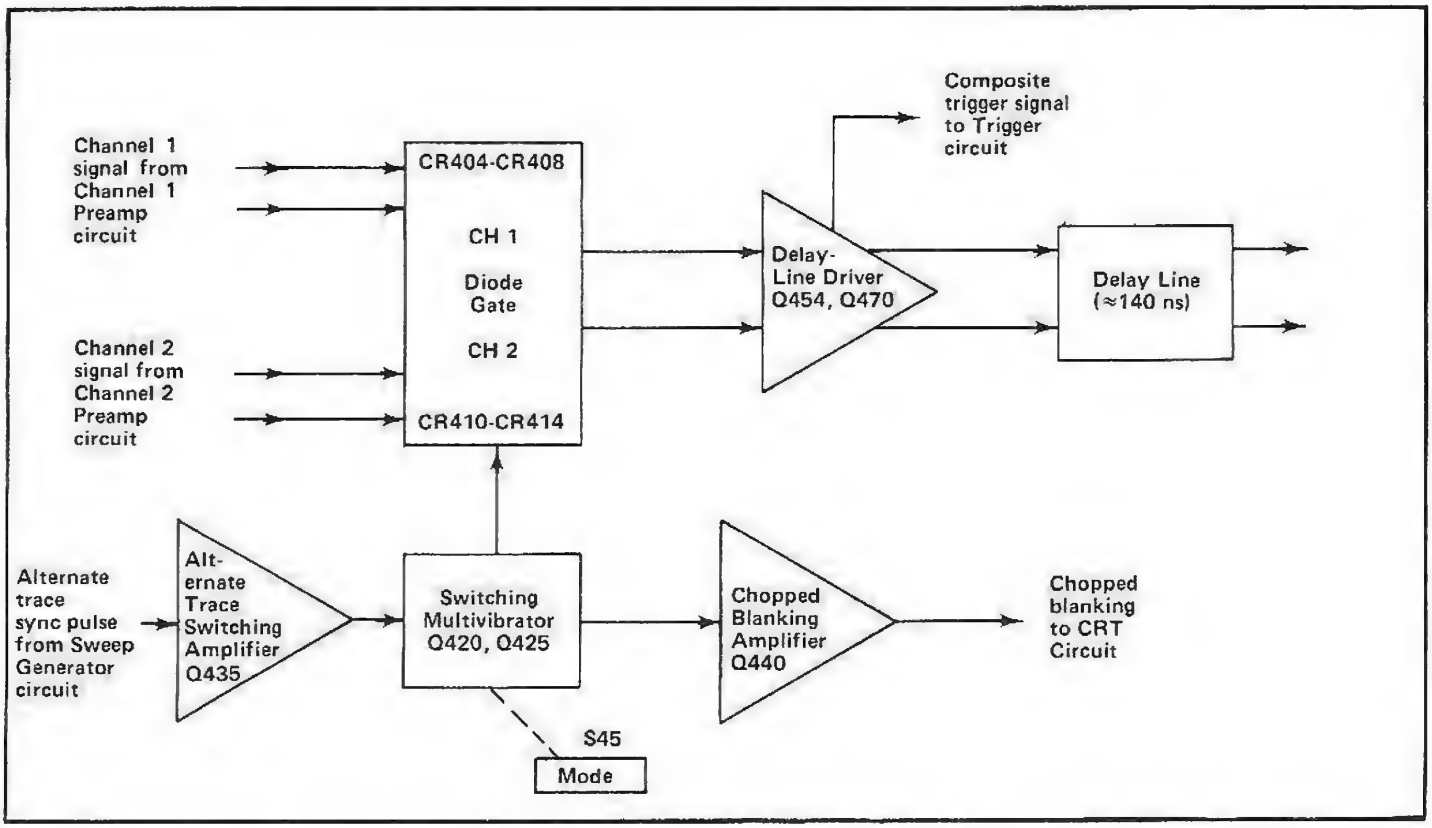

Fig. 3-4. Channel Switch detailed block diagram.

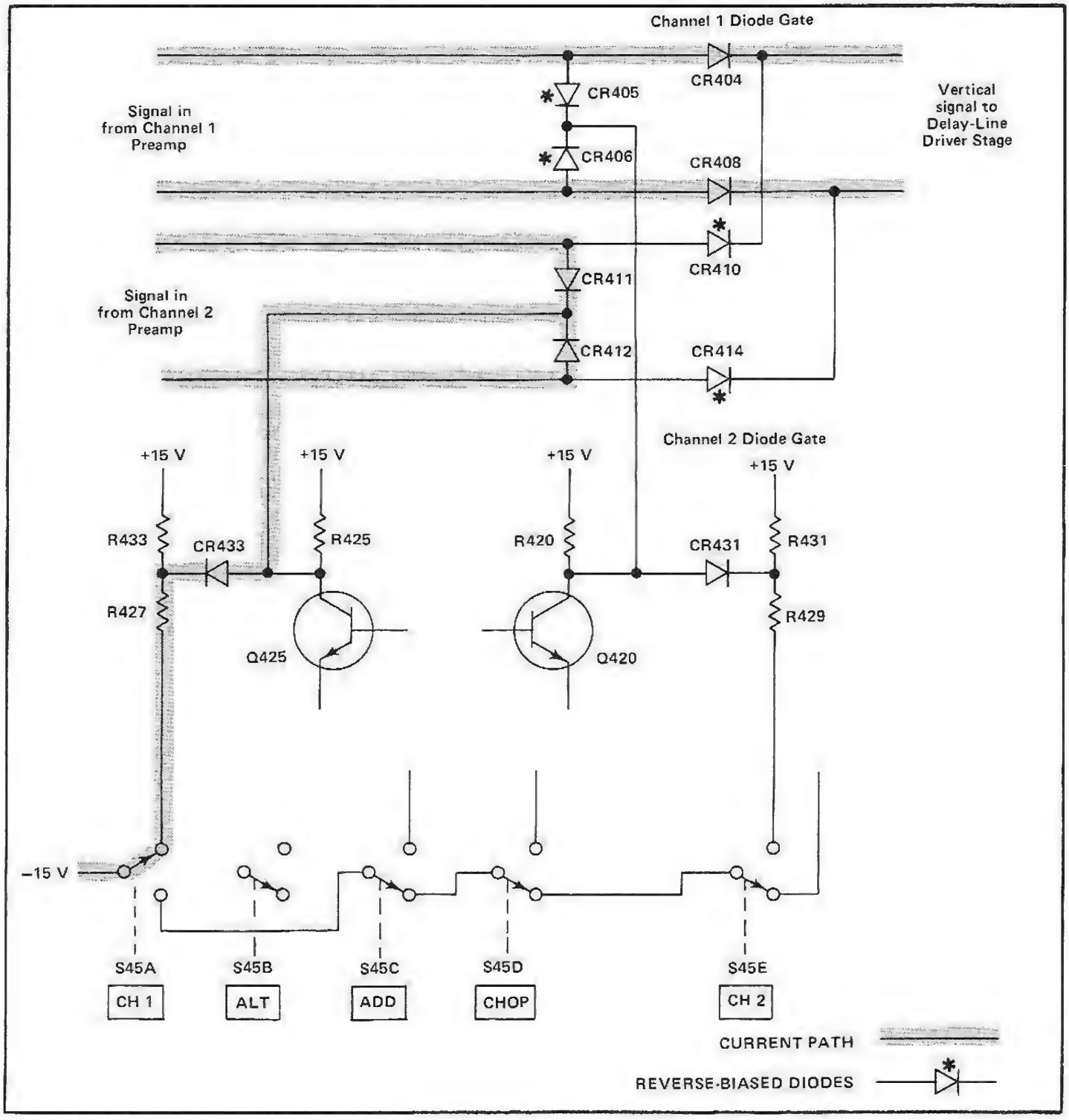

Fig. 3-5. Effect of Diode Gates on signal path (simplified path). Conditions shown for CH 1 mode of operation.

Switching Multivibrator stage through R435 and CR428 or CR426. For example, if Q420 is conducting, current is supplied to Q420 through CR426. The current flow through collector resistor R420 drops the CR405-CR406 cathode level negative with respect to the cathodes of CR404 & CR408, so the Channel 1 Diode Gate is blocked, as for Channel 2 only operation. The signal passes through the Channel 2 Diode Gate to the Delay-Line Driver.

The alternate-trace sync pulse is applied to Q435 through C430 at the end of each sweep. This differentiated negative-going sync pulse momentarily interrupts the current through Q435, and both Q420 and Q425 are turned off. When Q435 turns on again after the alternate-trace sync pulse, the charge on C425 determines whether Q420 or Q425 conducts. For example, when Q420 is conducting, C425 is charged more positively on the CR426 side to the

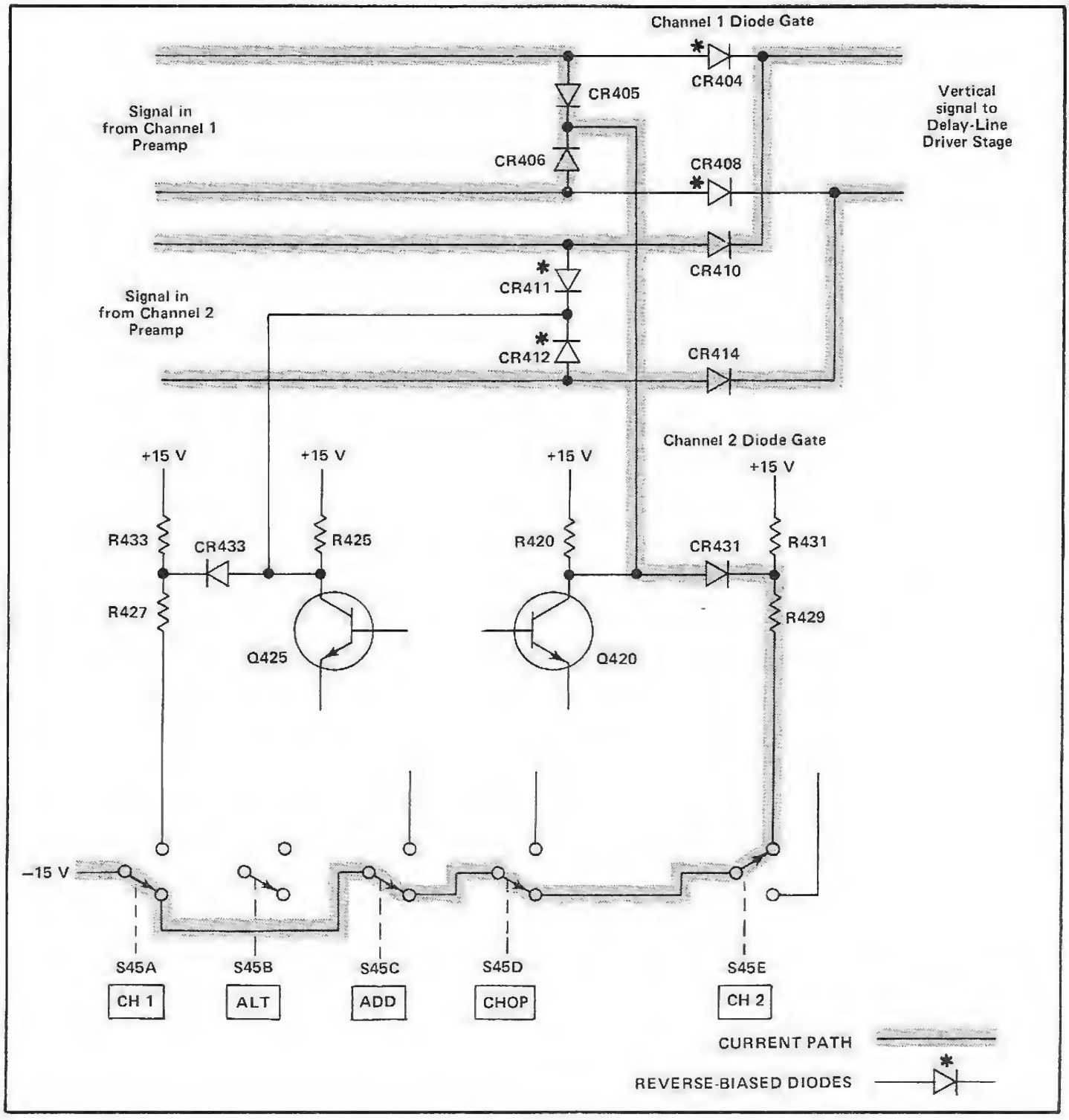

Fig. 3-6. Effect of Diode Gates on signal path (simplified path). Conditions shown for CH 2 mode of operation.

emitter level of Q420, and more negatively (toward the collector level of Q435 through R428, CR432 and R432) on the CR428 side. This charge is stored while Q435 is off, and holds the emitter of Q425 more negative than the emitter of Q420. When both Q420 and Q425 are off the voltage at their bases becomes approximately equal. When Q435 comes back on, the transistor with the most negative emitter will start conducting first, with the resulting negative movement at its collector holding the other transistor off. The conditions described previously are reversed; now the Channel 2 Diode Gate is reverse biased, and the Channel 1 signal passes through the Channel 1 Diode Gate.

CHOP. In the CHOP mode of operation, the Switching Multivibrator stage free runs as an astable multivibrator at

about a 100 kHz rate. The emitters of Q420 and Q425 are connected to −15 volts through R428, R426, the primary of T435, and R438. At the time of turn-on, one of the transistors begins to conduct; for example, Q420. The negative level at the collector of Q420 forward biases CR405-CR406 and back biases CR404 and CR408, preventing the Channel 1 signal from reaching the Delay-Line Driver stage. Meanwhile, the Channel 2 Diode Gate passes the Channel 2 signal to the Delay-Line Driver stage.

The frequency-determining components in the CHOP mode are C425-R419-R426-R428. Switching action occurs as follows: when Q420 is on, C425 attempts to charge to −15 volts through R428. The emitter of Q425 slowly goes toward −15 volts as C425 charges. The base of Q425 is held at a negative point determined by the voltage divider R423-R421 between −15 volts and the collector voltage of Q420. When the emitter voltage of Q425 reaches a level slightly more negative than its base, Q425 conducts. Its collector level goes negative and pulls the base of Q420 negative through divider R422-R424 to cut Q420 off. This switches the Diode Gate stage to connect the opposite half to the Delay-Line Driver stage. Again C425 begins to charge toward −15 volts, but this time through R426. The emitter of Q420 slowly goes negative as C425 charges, until Q420 turns on. Q425 is shut off and the cycle begins again. Diodes CR426 and CR428 are prevented from conducting by CR432 and R432, so they are effectively removed from the circuit in the CHOP mode.

The Chopped Blanking Amplifier stage, Q440, provides an output pulse to the Z Axis Amplifier circuit which blanks out the transitions between the Channel 1 and the Channel 2 traces. When the Switching Multivibrator stage changes states, the voltage across T435 momentarily increases. A negative pulse is applied to the base of Q440 to turn it off. The width of the pulse at the base of Q440 is determined by R436 and C436. Q440 is quickly driven into cutoff and the positive-going output pulse, which is coincident with trace switching, is connected to the Z Axis Amplifier circuit through CR440 and R445.

ADD. In the ADD mode of operation, the Diode Gate stage allows both signals to pass to the Delay-Line Driver stage. The Diode Gates are both held on by −15 volts applied to their cathodes through R450 and R452. Since both signals are applied to the Delay-Line Driver stage, the output signal is the algebraic sum of the signals on both Channels 1 and 2.

Delay-Line Driver

Output of the Diode Gate stage is applied to the Delay-Line Driver stage Q454 and Q470. Q454 and Q470 are connected as feedback amplifiers with C456-R456-R457 and C472-R472-R474 providing feedback from the collector to the base of the respective transistor. A sample of the signal in the collector circuit of Q470 is used for triggering in the COMP mode of trigger operation. Switch S479 connects capacitor C479 between the output signal lines to reduce the upper −3 dB bandwidth limit of the Vertical Amplifier system to approximately 5 megahertz. C460-R460 and C461-R461 provide high frequency compensation of the Delay Line termination. The output of the Delay-Line Driver stage is connected to the Vertical Output Amplifier through the Delay Line.

VERTICAL OUTPUT AMPLIFIER

General

The Vertical Output Amplifier circuit provides the final amplification for the vertical deflection signal. This circuit includes the Delay Line and the BEAM FINDER pushbutton. The BEAM FINDER pushbutton compresses an overscanned display to within the viewing area when pressed. Fig. 3-7 shows a detailed block diagram of the Vertical Output Amplifier circuit. A schematic of this circuit is shown on diagram 4 at the rear of this manual.

Delay Line

Delay Line DL500 provides approximately 140 nanoseconds delay for the vertical signal to allow the Sweep

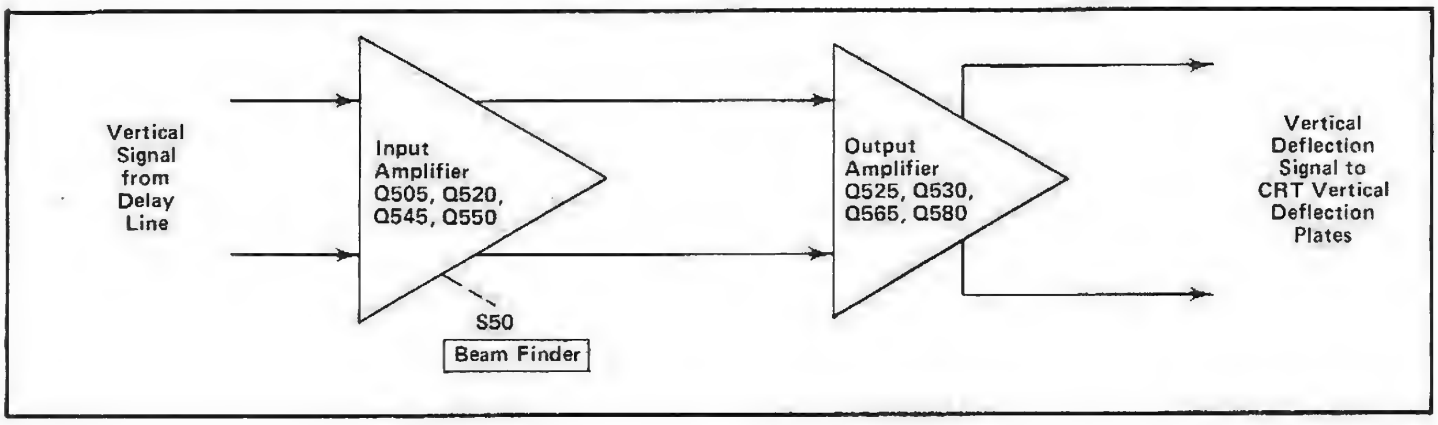

Fig. 3-7. Vertical Output Amplifier detailed block diagram.

Generator circuits time to initiate a sweep before the vertical signal reaches the vertical deflection plates of the CRT. This allows the instrument to display the leading edge of the signal originating the trigger pulse when using internal triggering.

Input Amplifier

Q505 and Q545 are connected as common-base amplifiers to provide a low input impedance to properly terminate the Delay Line. It also provides isolation between the Delay Line and the following stages. Q520 and Q550 limit the maximum dynamic swing of the amplifier by turning on and conducting when excessive amounts of signal are present at the amplifier input. When closed, the BEAM FINDER switch S50 forward biases CR521 and CR551, thereby setting a more positive level at the bases of Q520 and Q550. This more positive level makes Q520 and Q550 conduct on smaller-than-normal overdrive signals, causing the overall dynamic swing of the Vertical Output Amplifier to be limited within the CRT graticule area. Q515 and Q555 are emitter followers to provide low output impedance.

Output Amplifier

Q525 and Q565 comprise an emitter-coupled push-pull amplifier that drives the output power amplifiers Q530 and Q580. R568, R571, R572 and R574 set the gain of the stage by controlling the signal degeneration between the emitters of Q525 and Q565. R572 is a thermistor which reduces in resistance with increases in ambient temperature. This increases the gain of the stage, to counteract the reduction in overall amplifier gain that occurs when the ambient temperature increases. Variable capacitor C572 and the series RC network C570 and R570 provide high-frequency compensation to optimize amplifier frequency response. L533 and L584 are high-frequency peaking adjustments to provide additional amplifier compensation.

TRIGGER PICKOFF AND GENERATOR

General

The Trigger Pickoff circuit selects and amplifies the internal trigger signal to the level necessary to drive the Trigger Generator circuit. Input signal for the Trigger Pickoff circuit is either a sample of the signal applied to Channel 1, or a sample of the composite vertical signal from the Channel Switch circuit.

The Trigger Generator circuit produces trigger pulses to start the Sweep Generator circuit. These trigger pulses are derived either from the internal trigger signal from the vertical deflection system, an external signal connected to the EXT TRIG input connector, or a sample of the line voltage applied to the instrument. Controls are provided in this circuit to select trigger level, slope, coupling, and source. Fig. 3-8 shows a detailed block diagram of the Trigger Pickoff & Generator circuit. A schematic of this circuit is shown on diagram 5 at the back of this manual.

Trigger Pickoff

Diode Gate. The Diode Gates, consisting of two diodes each, can be thought of as switches which allow either of the two internal trigger signals to be coupled to the Trigger Pickoff Amplifier. CR280 and CR285 control the Channel 1 signal, and CR270 and CR275 control the composite signal. These diodes are in turn controlled by the TRIGGER SOURCE switches.

For CH 1 trigger operation, +15 volts is applied to the anode of CR270 through COMP Source switch S72B. R270 is forward biased and pulls the collector circuit of Q280 positive, which back biases and turns off CR275. CR285 remains forward biased, and couples the CH 1 trigger signal to the base of Q275. In the COMP mode of trigger operation, +15 volts is applied to the anode of CR280 through COMP Source switch S72B and R282. CR280 is now forward biased, pulling the cathode of CR280 positive, which back biases and turns off CR285. CR275 remains forward biased and couples the amplified COMP trigger signal present in the collector circuit of Q280 to the base of Q275. R274 and R284 set the DC level at the collector of Q275 to zero volts for no-signal, zero-volt input level conditions.

Q275 and Q278 comprise an emitter-coupled comparator amplifier. Q275 by itself is a feedback amplifier, with R285 providing feedback from the collector to the base of Q275. The DC level at the base of Q278 determines the DC level at the base of Q275.

Trigger Source

The TRIGGER SOURCE switches S72A and S72B select the source of the trigger signal. Four trigger sources are available: CH 1, COMP, external, and line. EXT ATTEN switch S70 provides 10 times attenuation for the external trigger signal. The internal trigger signals (CH 1 and COMP) are obtained from the Trigger Pickoff circuit discussed above.

The line trigger signal is obtained from the secondary of transformer T1115 in the Power Supply Primary circuit. This sample of the line frequency, about .7 volt RMS, is coupled to the Trigger Generator circuit in the LINE mode of operation. The TRIGGER COUPLING switches should not be in the LF REJ mode of operation when using this trigger source, as the signal will be blocked by the LF reject circuit.

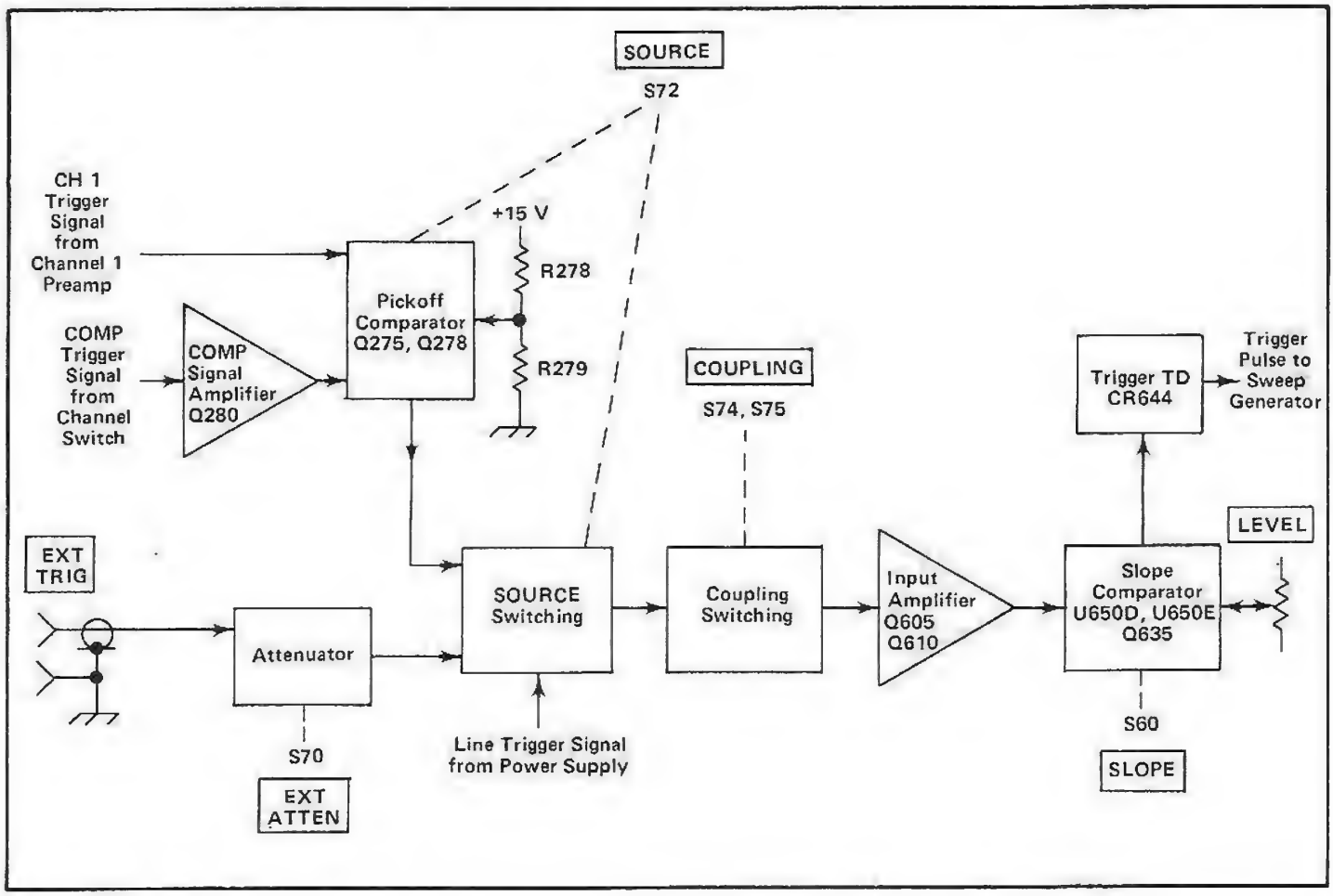

Fig. 3-8. Trigger Pickoff and Generator detailed block diagram.

External trigger signals applied to the EXT TRIG input connector can be used to trigger the Sweep Generator in the EXT TRIG mode of operation. Input resistance at DC is about one megohm paralleled by about 100 picofarads (about 70 picofarads when EXT ATTEN switch S70 is in the 1:10 position). Setting the EXT ATTEN switch to the 1:10 position attenuates the input signal by a factor of 10 to provide more LEVEL control range, while maintaining the one megohm input resistance characteristic.

Trigger Coupling

The TRIGGER COUPLING switches S74, S75A, and S75B offer a means of accepting or rejecting certain components of the trigger signal. In the AC and LF REJ mode of trigger coupling, the DC component of the trigger signal is blocked by coupling capacitor C72 or C74. Frequency components below about 60 hertz are attenuated when using AC coupling and below about 50 kilohertz when using LF REJ coupling. The higher-frequency components of the trigger signal are passed without attenuation.

In the HF REJ mode of trigger coupling, the trigger signal is DC coupled to the input if the AC and LF REJ pushbuttons are not also depressed. High-frequency components of the trigger signal (above about 50 kilohertz) are attenuated, while the lower-frequency components are passed without attenuation. The DC mode of trigger coupling passes all signals from DC to 25 megahertz.

Input Source Follower

The Input Source Follower, Q605A, provides a high input impedance for the trigger signal. It also provides isolation between the Trigger Generator circuit and the trigger signal source. Diode CR603 protects Q605A if an excessive negative input voltage is applied to the EXT TRIG input connector. The output at the anode of VR605 is connected to emitter follower stage Q610. Q605B is a relatively constant current source for Q605A, and provides temperature compensation of Q605A.

Slope Comparator

U650D and U650E are connected as an emitter-coupled difference amplifier (comparator) to provide selection of the slope and level at which the sweep is triggered. The reference voltage for the comparator is provided by the LEVEL control R60B and the Trigger Level Centering

adjustment R629. The Trigger Level Centering adjustment sets the level at the base of U650E so the display is correctly triggered when the LEVEL control is centered. The LEVEL control varies the base level of U650E to select the point on the trigger signal where triggering occurs. Diodes CR615 and CR616 prevent overdrive occurring in the Slope Comparator. Q618 is a relatively constant current source for U650D and U650E.

The slope of the input signal which triggers the Sweep Generator is determined by the SLOPE switch S60. When the SLOPE switch is set to +, +5 volts is connected to the base of Q635 through R635 and to the anode of CR634. See Fig. 3-9. This forward biases CR634, which turns on and pulls the cathode of CR634 positive also. At the same time the base-emitter junction of Q635 is zero biased, which turns off Q635. With Q635 turned off, its collector falls to a level of about +2 volts set by the voltage divider R637-R638. This back biases CR635, and the trigger signal in the collector circuit of U650D is allowed to pass to the Trigger TD CR644. The trigger signal in the collector circuit of U650E is conducted by CR634 and blocked from reaching the Trigger TD by back-biased diode CR632. The trigger signal in the collector circuit of U650D is amplified and inverted with respect to the input trigger signal. Since the output pulse from the Trigger Generator is derived from the negative-going portion of the signal applied to the Trigger TD, the sweep is triggered on the positive-going slope of the input trigger signal.

When the SLOPE switch is set to −, conditions are reversed. The base of Q635 is returned to ground through R634 and R635. See Fig. 3-10. This back biases CR634 and forward biases the base-emitter junction of Q635 sufficiently to drive Q635 into saturation. The collector of Q635 rises to within about 0.2 volt of the emitter, which forward biases CR635. Now CR630 is back-biased and CR632 is forward biased, allowing the trigger signal present in the collector circuit of U650E to be applied to the Trigger TD. The trigger signal in the collector circuit of U650E is in phase with respect to the input trigger signal, so the sweep is triggered on the negative-going slope of the input trigger signal.

Trigger TD

The Trigger TD stage shapes the output of the Slope Comparator to provide a trigger pulse with a fast leading edge. Tunnel diode CR644 is quiescently biased so it is on and in its low-voltage stage. The current from one of the transistors in the Slope Comparator stage is diverted through the Trigger TD stage. As the current increases due to a change in the trigger signal, tunnel diode CR644 switches to its high-voltage state. The tunnel diode remains

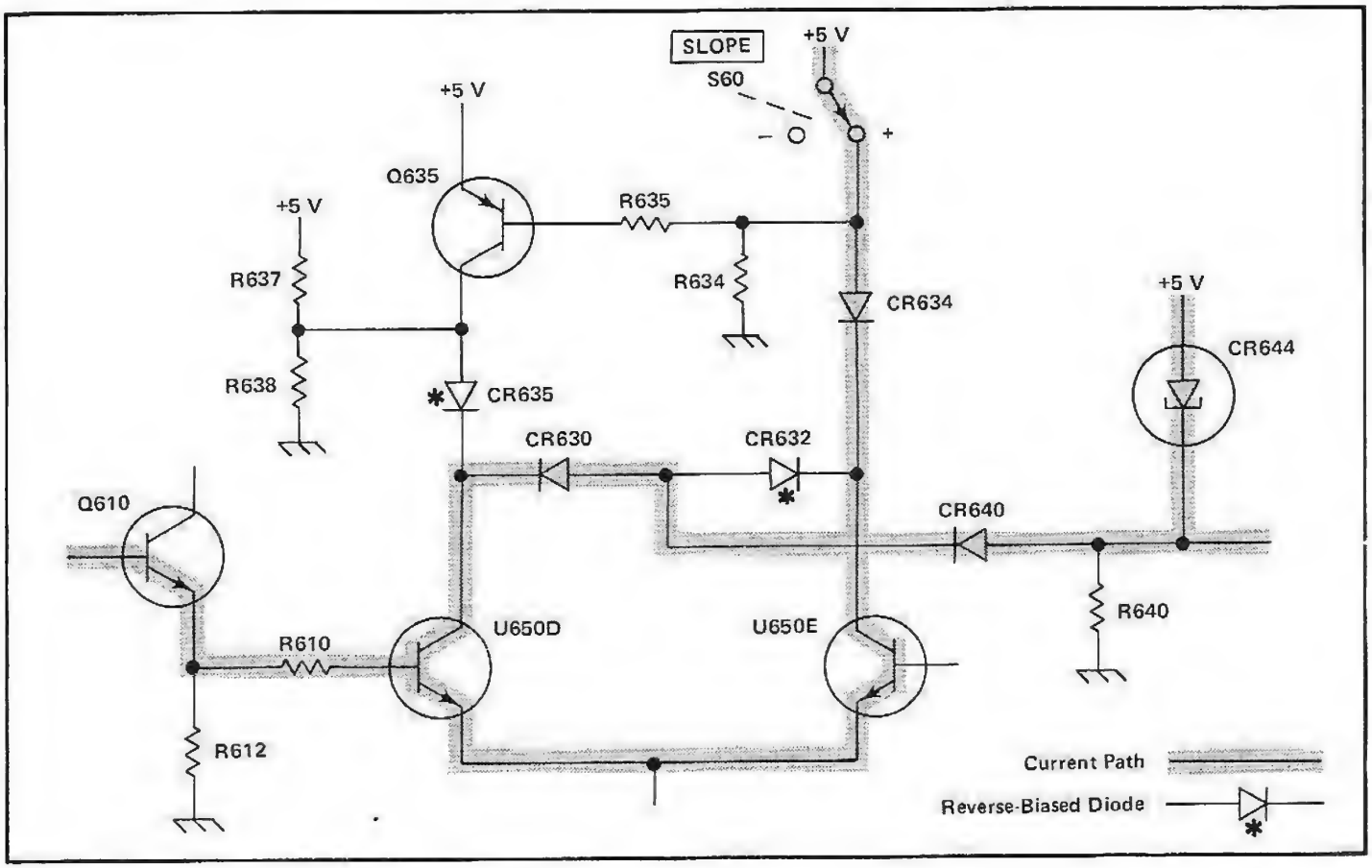

Fig. 3-9. Trigger signal path for positive-slope triggering (simplified Trigger Generator diagram).

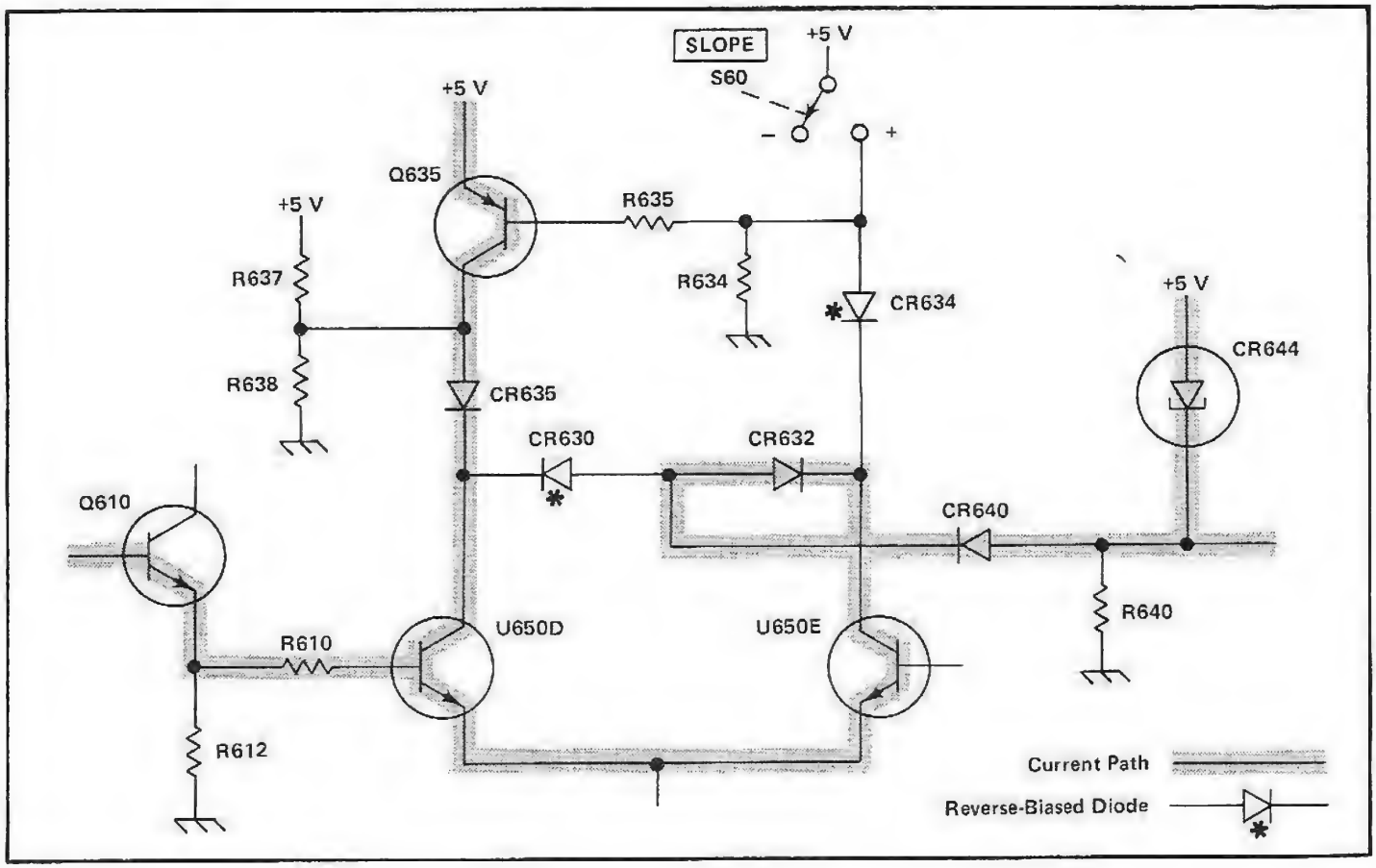

Fig. 3-10. Trigger signal path for negative-slope triggering (simplified Trigger Generator diagram).

in this condition until the current from the Slope Comparator stage decreases due to a change in the trigger signal applied to the input. Then the current through CR644 decreases and it reverts to its low-voltage state.

SWEEP GENERATOR

General

The Sweep Generator circuit produces a sawtooth voltage which is amplified by the Horizontal Amplifier circuit to provide horizontal sweep deflection on the CRT. This output signal is generated on command (trigger pulse) from the Trigger Generator circuit. The Sweep Generator also produces an unblanking gate to unblank the CRT during sweep time and an alternate trace sync gate to switch vertical channels during sweep retrace time. Fig. 3-11 shows a detailed block diagram of the Sweep Generator circuit. A schematic of this circuit is shown on diagram 6 at the back of this manual.

The Sweep MODE switch allows three modes of operation. In the NORM mode, a sweep is produced only when a trigger pulse is received from the Trigger Generator circuit. Operation in the AUTO mode is much the same as NORM, except that a free-running trace is displayed in the absence of an adequate trigger signal. In the SINGLE SWEEP mode, operation is also similar to NORM except that the sweep is not recurrent. The following circuit description is given with the sweep MODE switch set to NORM. Differences in operation for the other two modes are discussed later.

Normal Sweep Mode Operation

Sweep Gate. The negative-going trigger pulse generated in the Trigger Generator circuit is applied to the Sweep Gate stage through inverting amplifier Q645 and C663-R663. CR678 is quiescently biased on in its low-voltage state. When the positive-going trigger pulse is applied to the anode of CR678, the current through the tunnel diode increases and it rapidly switches to its high-voltage state, where it remains until reset by the Sweep Reset Multivibrator stage at the end of the sweep. The positive-going level at the anode of CR678 is connected to the base of U680A through R680. U680A is turned on and its collector goes negative. This negative-going step is connected to the base of U680B through C686-R686. U680B is turned off and its collector goes positive. This positive-going step is connected to the base of the Sweep Gate Amplifier.

Sweep Gate Amplifier. The Sweep Gate Amplifier U680C is an emitter follower quiescently conducting

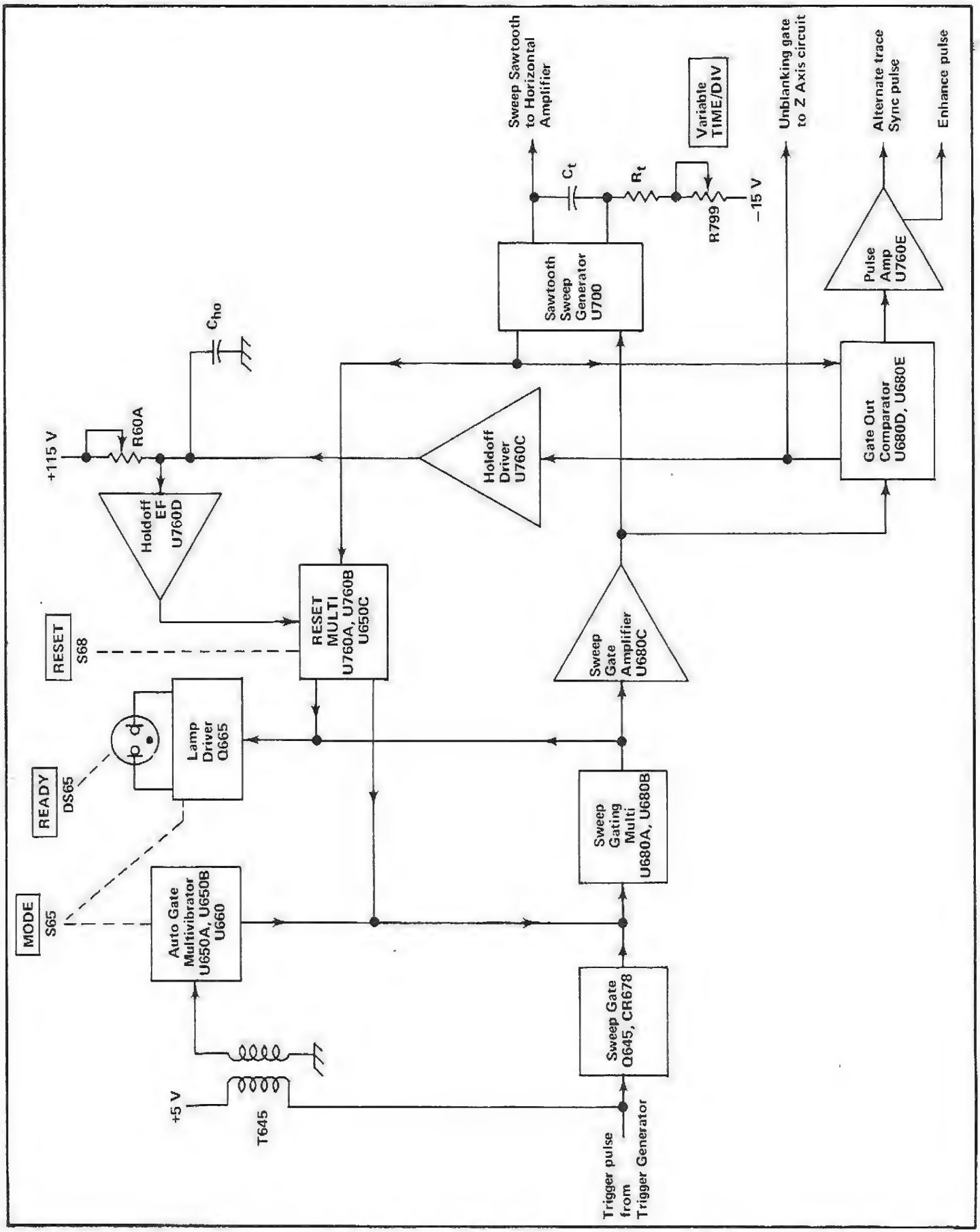

Fig. 3-11. Sweep Generator detailed block diagram.

current through R742, R796, R794, R692, and R690. When sweep triggering occurs, the positive-going excursion at the base of U680C is present in the emitter circuit and is applied to pin 1 of the Sawtooth Sweep Generator U700 and the base of U680D.

Gate Output Comparator. The positive-going signal at the base of U680D turns U680D on, and turns U680E off. The negative-going excursion at the collector of U680D is applied to the emitter of Holdoff Driver U760C, and is also coupled to the Z-Axis circuit through R790, CR794, and CR795 to unblank the CRT during sweep time. At the same time that the collector of U680D is going negative, the collector of U680E is going positive. This positive-going voltage is applied to the base of the Pulse Amplifier U760E and a positive-going Alternate Trace Sync Pulse is coupled from the emitter to the Channel Switch circuit while a negative going Enhance Pulse is coupled from the collector to the Storage circuit.

Holdoff Driver. The negative-going signal at the collector of U680D when the sweep begins is connected to the Holdoff Capacitor through U760C. This negative-going signal discharges the Holdoff Capacitor completely at the start of each sweep to provide accurate sweep holdoff time. CR785 clamps the collector of U760C so it does not go more negative than about −0.5 volt.

Sawtooth Sweep Generator. The basic sweep generator is a Miller Integrator circuit. When pin 1 of U700 is positive, the timing capacitor, C_T, begins to charge through the timing resistor, R_T. The timing resistor and capacitor are selected by the TIME/DIV switch S700 to provide the various sweep rates listed on the front panel. Diagram 8 shows a complete diagram of the TIME/DIV switch. The Sweep Cal adjustment R727 allows calibration of this circuit for accurate sweep timing. The Variable TIME/DIV control R799 provides continuously variable uncalibrated sweep rates by varying the charge rate of the timing capacitor. R703 is an Offset adjustment to adjust the quiescent DC level at pin 9 of U700 to zero volts. This reduces timing current errors between positions of the TIME/DIV switch.

The output sawtooth voltage signal at pin 8 of U700 is applied to the Horizontal Amplifier input. Voltage divider R705-R706 determines the amplitude of the sawtooth ramp. When the ramp reaches this predetermined level, a reset pulse is generated at pin 4 of U700. This reset pulse is applied to the base of U760A in the Sweep Reset Multivibrator and to the base of U680E in the Gate Output Comparator.

Sweep Reset Multivibrator. Quiescently, U760A is turned off and U760B is turned on. The sweep reset pulse (a narrow, positive-going, rectangular pulse) is applied to the base of U760A through R700 and CR710. U760A is turned on and its collector goes negative. This negative movement is coupled to the base of U760B and turns it off, causing its collector to go positive. The positive movement at the collector of U760B is coupled to the base of U650C which, prior to this, had been turned off. The increase in forward bias of the base-emitter junction of U650C drives it into saturation. The collector of U650C moves negative until it is only a few tenths of a volt more positive than the grounded emitter. The negative movement of the collector of U650C is coupled to the anode of Sweep Gating Tunnel Diode CR678 through R678, causing CR678 to switch from its high-voltage state to a low-voltage state where it is conducting almost no current. As long as U650C is turned on, CR678 is prevented from switching to its high voltage state.

Holdoff Emitter Follower. When the sweep reset pulse causes U760A and U760B to reverse states, the pulse also causes U680E and U680D in the Gate Output Comparator to switch states. The reset pulse turns on U680E which causes U680D to turn off. The positive movement at the collector of U680D when it turns off causes U760C to turn off and the Holdoff Capacitor, C_{HO}, starts to charge positive through R778 and R60A. This positive movement is coupled through Holdoff Emitter Follower U760D and emitter resistor R774 to the anode of diode CR765. When sufficient forward bias is achieved, CR765 will turn on and couple the positive-going movement to the base of U760B in the Sweep Reset Multivibrator, causing U760B to turn on and U760A to turn off. The negative movement at the collector of U760B turns U650C off and CR678 conducts current in its low-voltage state, ready to receive the next trigger pulse.

R60A varies the charge rate of the Holdoff Capacitor to provide a stable display at fast sweep rates. This change in holdoff allows sweep synchronization for less display jitter at the faster sweep rates, and has very little effect at slow sweep rates. R60A is ganged with the TRIGGER LEVEL control and is adjusted by rotating the LEVEL knob. The Holdoff Capacitor is changed by the TIME/DIV switch for the various sweep rates to provide the correct holdoff time.

Auto Sweep Mode Operation

Operation of the Sweep Generator circuit in the AUTO mode is the same as for the NORM mode just described when an adequate trigger pulse is present. However, when an adequate trigger pulse is not present, a free-running reference trace is produced in the AUTO mode. This occurs as follows:

Auto Multivibrator. U650A and U650B form a monostable multivibrator. Quiescently with no trigger pulses being generated by the Trigger Generator circuit, U650B is conducting and U650A is biased off by only about 150 millivolts. With U650A not conducting, its collector moves

positive, which forward biases CR660 allowing Q660 to conduct. Q660 conducts its current through R646, C663-R663, and Sweep Gating Tunnel Diode CR678. The added current through tunnel diode CR678 automatically switches it to its high-voltage state at the end of the sweep holdoff period. The result is that the Sweep Generator circuit is automatically retriggered at the end of each holdoff period, and a free-running sweep is produced. Since the sweep free-runs at the sweep rate of the Sweep Generator, a bright reference trace is produced even at fast sweep rates.

When trigger pulses are being produced by the Trigger Generator circuit, positive-going pulses are coupled to the base of U650A by transformer T645. These positive pulses turn on U650A, which causes U650B to turn off. The collector of U650A goes negative and the collector of U650B goes positive, which combines to turn off CR660 and Q660. When U650A turned on and its collector went negative, capacitor C650 discharged very rapidly. If the multivibrator does not receive another trigger pulse, C650 will recharge to approximately +15 volts in about 115 milliseconds. The auto gate level at the collector of transistor Q660 will be negative when the Trigger Generator circuit is producing trigger pulses, and positive when the Trigger Generator circuit is not producing trigger pulses. In both the NORM and SINGLE SWEEP modes of operation, −15 volts is applied to the anode of CR660 through R660 to back bias CR660 and prevent Q660 from conducting.

Single Sweep Mode Operation

General. Operation of the Sweep Generator in the SINGLE SWEEP mode of operation is similar to operation in the other modes. However, after one sweep has been produced, the Sweep Reset Multivibrator stage does not reset. All succeeding trigger pulses are locked out until the RESET button is pushed.

In the SINGLE SWEEP mode of operation, −15 volts is applied to the top of READY light DS65 and to the emitter of CR770. CR770 is forward biased and holds CR765 back biased to prevent the Sweep Reset Multivibrator from resetting at the end of the sweep holdoff time.

Single-Sweep Reset. The Single Sweep Reset circuit produces a pulse to reset the Sweep Reset Multivibrator stage so another sweep can be produced in the SINGLE SWEEP mode of operation. After a sweep has been produced in the SINGLE SWEEP mode, U760A is on and U760B is off. Pressing the RESET pushbutton applies +15 volts to the voltage divider made up of R784, R783, and R782. C782 capactively couples a positive-going spike to the anode of CR765. CR765 becomes forward biased and turns on, coupling the positive-going spike to the base of U760B. U760B now turns on and U760A turns off. When U760B turns on, its collector goes negative, which turns Q665 off and also turns U650C off, allowing the Sweep Gating Tunnel Diode CR678 to accept the next trigger pulse.

When Q665 turns off, its collector goes positive, allowing sufficient voltage to be impressed across READY light DS65 to turn the READY light on. This indicates that the Sweep Generator is ready to produce a sweep upon receipt of the next trigger pulse. When the next trigger pulse is received, the collector of U680B in the Sweep Gating Multivibrator will go positive and turn on Q665. The collector of Q665 will go negative, causing the READY LIGHT to turn off.

HORIZONTAL AMPLIFIER

General

The Horizontal Amplifier circuit provides the output signal to the CRT horizontal deflection plates. The signal applied to the input of the Horizontal Amplifier is determined by the TIME/DIV switch. The signal can be a sawtooth waveform generated internally within the instrument, or some external signal applied to the EXT HORIZ input connector located on the instrument rear panel. The Horizontal Amplifier circuit also contains the horizontal magnifier circuit and the horizontal positioning network. Fig. 3-12 shows a detailed block diagram of the Horizontal Amplifier circuit. A schematic of this circuit is shown on diagram 7 at the rear of this manual.

Input Paraphase Amplifier

The input signal for the Horizontal Amplifier is selected by the TIME/DIV switch, S700A. In all positions of the switch except EXT HORIZ, the sawtooth from the Sweep Generator circuit is connected to the base of Input Amplifier Q825A. In the EXT HORIZ position of the switch, the signal applied to the base of Q825A is obtained from the EXT HORIZ input connector.

Q825A and Q825B comprise an emitter-coupled paraphase amplifier. This stage converts the single-ended input signal to a push-pull signal necessary to drive the horizontal deflection plates of the CRT. R816, R817, R826 and R827 control the emitter degeneration between Q825A and Q825B to set the gain of the stage. The adjustment of R817 determines overall horizontal amplifier gain. Q818 is a constant current source for Q825A and Q825B. Horizontal positioning is provided by the POSITION control (R55A-R55B) connected to the base of Q825B. This control is a dual-range control to provide a combination of coarse and fine adjustment in a single control. When the control is rotated, fine control R55B provides positioning for a range of about 0.3 major division for a normal (unmagnified) display. Then after the fine range is exceeded, the coarse control R55A provides rapid positioning of the trace. R816, R817, R826 and R827 control the emitter degeneration between Q825A and Q825B to set the gain of the

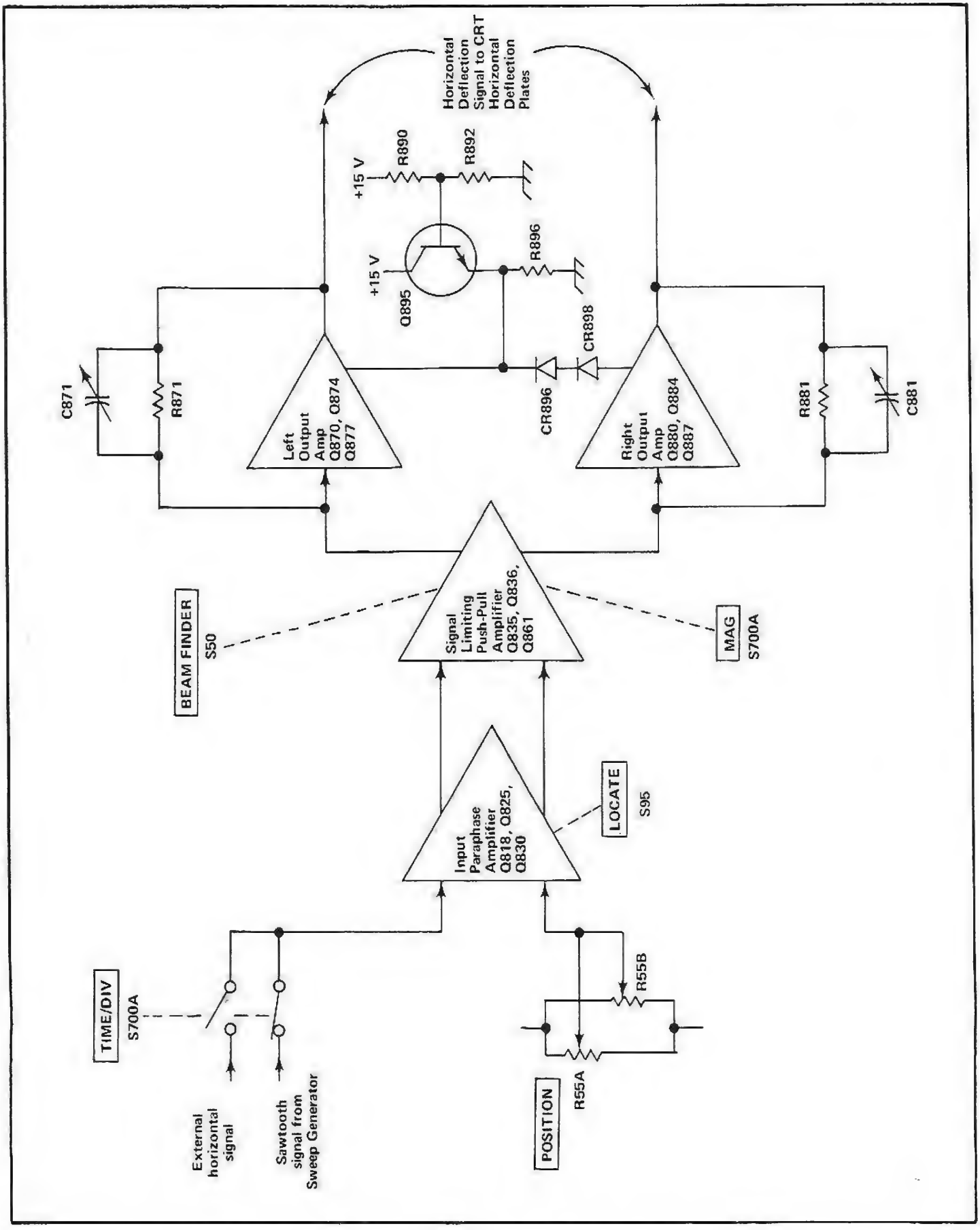

Fig. 3-12. Horizontal Amplifier detailed block diagram.

stage. The adjustment of R817 determines overall horizontal amplifier gain. Pressing the LOCATE button applies −15 volts to the base of Q825B through R95 and R811. This provides a small amount of positioning of the display in the direction of the non-store pre-view area to aid in locating display prior to storing a single-sweep. The output signals from the collectors of Q825A and Q825B are applied to the bases of emitter followers Q830A and Q830B respectively.

Signal Limiting Push-Pull Amplifier

Q835 and Q836 form a push-pull amplifier stage with Q835A and Q836A comprising a cascade amplifier in one side and Q835B and Q836B a cascade amplifier in the other side. Sweep magnification is accomplished by modifying the gain setting resistance between the emitters of Q835A and Q835B. CR835 and CR865 limit the difference in signal amplitude between the bases of emitter followers Q836A and Q836B. This prevents amplifier over-drive when the sweep is magnified or positioned to one extreme or the other. CR836 and CR866 provide additional overdrive protection.

Q861 is a relatively constant current source for Q835 and Q836. When the BEAM FINDER push-button is pushed the current through Q861 is reduced by approximately two milliamperes. This reduces the dynamic range of the signal limiting push-pull amplifier stage, thereby limiting the trace to within the CRT graticule area. The Magnifier Registration adjustment R868 balances the quiescent DC current to the bases of Q870 and Q880 so a centerscreen display does not change position when the sweep is magnified.

Output Amplifier

The push-pull output of the Signal Limiting Push-Pull Amplifier stage is connected to the Output Amplifier through CR870 and CR880. Each half of the Output Amplifier can be considered as a single-ended feedback amplifier which amplifies the signal current at the input to produce a voltage output to drive the horizontal deflection plates of the CRT. The amplifiers have a low input impedance and require very little voltage change at the input to produce the desired output change.

Q895 is a relatively constant voltage source. The base of Q895 is biased to set the emitter at approximately +5 volts and the anode of CR898 at approximately +6.5 volts. This sets the base of Q880 and the base of Q870 very near the same quiescent DC level. CR870 and CR880 become back biased and are turned off when overdrive in the positive direction occurs at their cathodes.

Transistors Q870 and Q880 are inverting amplifiers whose collector signals drive the emitters of complementary amplifiers Q874-Q877 and Q884-Q887 respectively. The output signal from complementary amplifier Q874-Q877 drives the left horizontal deflection plate of the CRT, and the output signal from complementary amplifier Q884-Q887 drives the right horizontal deflection plate. C871 and C881 adjust the transient response of the amplifier so it has good linearity at fast sweep rates.

POWER SUPPLY PRIMARY

General

The Power Supply Primary circuit provides controlled drive to the primary of power transformer T1085 to achieve more efficient generation of secondary voltages. This circuit also contains the circuitry necessary to regulate the secondary voltages against change due to variations in input line voltage or frequency, or changes in power supply load. Figure 3-13 shows a detailed block diagram of the Power Supply Primary circuit. A schematic of this circuit is shown on diagram 9 at the rear of this manual.

Line Input

Power is applied to this circuit through Line Fuse F1000, R1002, Thermal Cutout S1002, Line Filter FL1010, and POWER switch S1010. Resistor R1002 limits the amplitude of surge currents at instrument turn-on. Thermal cutout S1002 provides thermal protection for the instrument. If the internal temperature of the instrument exceeds a safe operating level, S1002 opens to interrupt the applied power. When the temperature returns to a safe level, S1002 closes to re-apply the power.

The Line Filter made up of C1004, C1006, L1004, R1004, and T1004 is designed primarily to suppress the 25-kilohertz interference originating within the power supply. L1004 provides differential and common-mode inductance; T1004 provides additional common-mode inductance. Common-mode filtering is provided by C1005 and C1006 along with the common-mode inductance of T1004. R1004 provides common-mode damping for C1004-C1006-T1004.

When the POWER switch S1010 is closed, line voltage is applied to the primary of transformer T1115 and to the full-wave bridge-rectifier CR1016. T1115 provides a sample of the AC line-voltage to the Trigger Generator circuit for operation in the LINE triggering mode. CR1016 rectifies the AC line voltage into a DC voltage to be used in the Power Supply Primary circuit. C1016 provides a measure of filtering to the remaining AC component. R1016 discharges C1016 when instrument power is turned off. Transformer T1036 provides additional 25-kilohertz filtering.

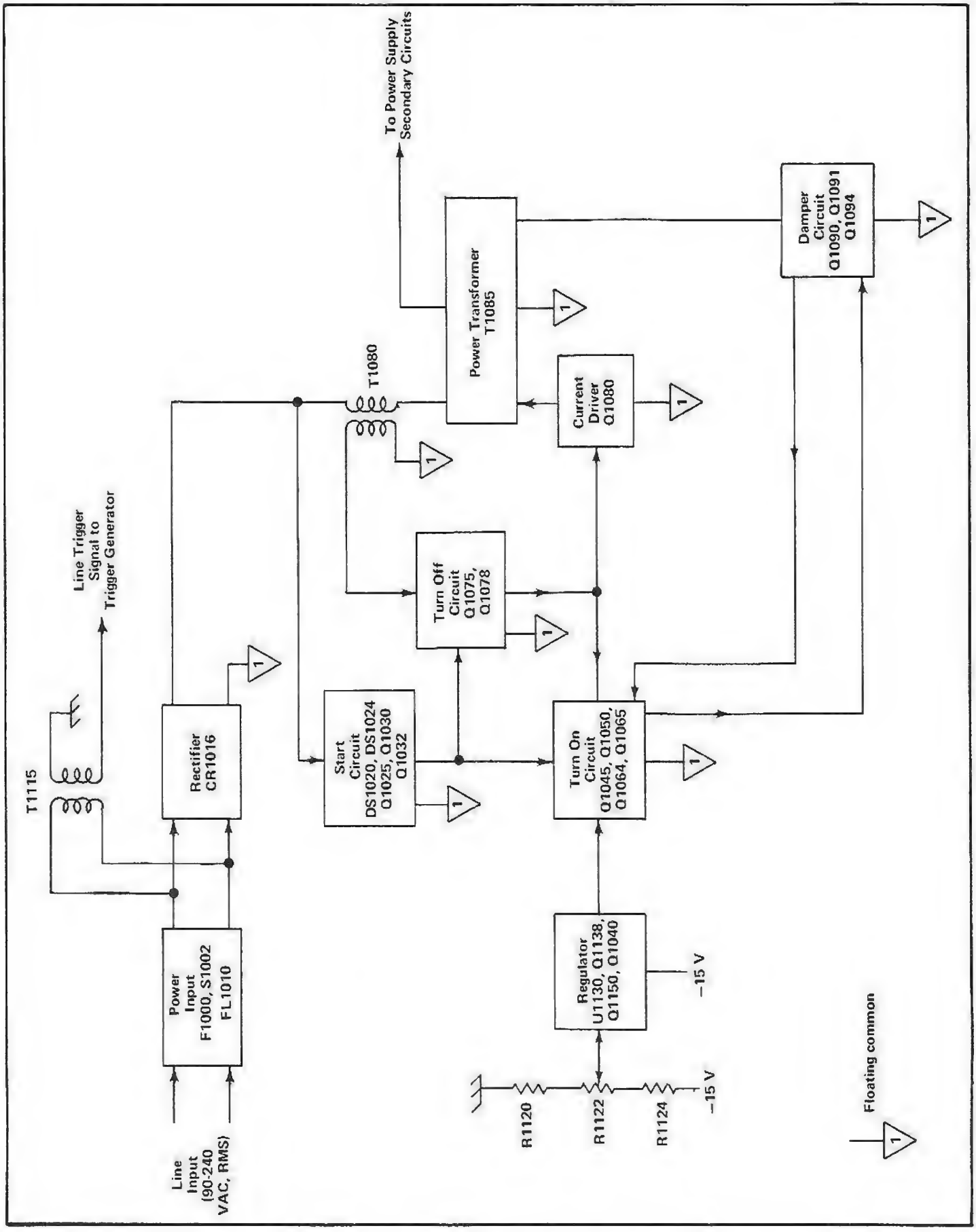

Fig. 3-13. Power Supply detailed block diagram.

Start Circuit

The rectified DC power is applied initially to the Power Supply Primary Circuit by the Start Circuit made up of DS1020, DS1024, Q1025, Q1030, Q1032 and their associated circuitry. DS1020, DS1024, C1024, R1020, and R1024 form a relaxation oscillator with a very low repetition rate (waveform period of approximately 5 seconds). When DS1024 is on and DS1020 is off, the base-emitter junction of Q1025 is forward biased, causing Q1025 to conduct. The collector circuit of Q1025 moves negative (very near the floating common potential) causing the base-emitter junctions of Q1030 and Q1032 and the diode CR1032 to be back-biased, preventing them from conducting.

When DS1020 is on and DS1024 is off, conditions are reversed. Q1025 is off and its collector rises to an approximately +51 volt level (with respect to the floating common) determined by zener diode VR1025. Q1030, Q1032, and CR1032 conduct, causing the junction of CR1032 and R1034 to rise to an approximately +50 volt level. This establishes a temporary V_{cc} voltage supply for the Turn On and Turn Off circuits in lieu of the normal V_{cc} voltage supplied by one winding of T1085 and half-wave rectifier CR1085. Normal circuit operation now takes place and a sufficiently positive V_{cc} voltage is generated to back-bias and prevent CR1032 from conducting.

Current Driver

The Current Driver stage, Q1080, controls the current conducted through the primary winding of Power Transformer T1085. Q1080 is in turn controlled by signal pulses from the Turn On and Turn Off circuits. Quiescently Q1080 is biased off, and must receive a positive-going pulse at its base from the Turn On circuit in order to conduct current through T1085. The Turn Off circuit monitors the current conducted through T1085 and generates a turn-off pulse when a preset maximum level of current is reached. Zener diodes VR1084 and VR1085 prevent the collector of Q1080 from going more than 250 volts more positive that the reference level at the anode of VR1085. This reference level will be dependent upon the value of line voltage applied to the instrument. This clamping action prevents exceeding the emitter to collector breakdown voltage rating of Q1080 during transformer flyback time when Q1080 is turned off, and also aids in regulation of the negative high voltage power supply.

Turn On Circuit

The Turn On circuit generates the pulse required to cause Q1080 to turn on and conduct current through the primary of T1085. With an adequate V_{cc} voltage supply at the emitter of Q1045, Q1045 will be biased into saturation. The collector of Q1045 will be within about 0.2 volt of the emitter. C1046 starts to charge toward this positive level through R1046. When the charge on C1046 reaches a level about 0.6 volt more positive than the level at the gate of Q1050, Q1050 will turn on and start to conduct current to discharge C1046 and, at the same time, forward bias the base-emitter junction of Q1064. When the current flow through Q1050 falls below the level necessary to keep Q1050 on, Q1050 will turn off and C1046 will start to charge again.

When Q1050 turns on, Q1064, which is quiescently biased off, starts to conduct current through the parallel combination of R1064 and the primary winding of transformer T1064. T1064 couples a positive-going movement to the emitter of Q1065. This positive movement is coupled back to the base of Q1064 through CR1060, R1060, and R1062, which reinforces the turn-on bias of Q1064. The positive movement at the emitter of Q1065 turns it on, which causes a positive pulse to be coupled to the base of Q1080 through CR1068 and R1068. Q1080 now turns on and starts to conduct current through the primary winding of T1085.

Turn Off Circuit

To prevent Q1080 from conducting excessive amounts of current, the Turn Off circuit monitors the amount of current flowing in the primary winding of T1085, and generates a turn-off pulse when a preset current level is reached. The secondary winding of T1080 develops a voltage across R1075 and Current Sense Adjustment R1074. When this voltage level becomes about 0.6 volt more positive than the voltage level at the gate of Q1075, Q1075 turns on and conducts current through R1076, CR1075, and the secondary winding of T1080. The resulting positive movement at the cathode of Q1075 is coupled through C1076 to the base of Q1078.

Q1078 now turns on and conducts current through the parallel combination of R1078 and the primary winding of T1078. The negative movement at the collector of Q1078 is coupled through R1071, C1071, and CR1070 to the base of Q1064 in the Turn On circuit to interrupt the turn-on process while the Turn Off circuit is trying to stop conduction through Q1080. Transformer T1078 couples a negative-going pulse through CR1078 and CR1079 to the base of Q1080. The negative-going pulse at the base of Q1080 is of sufficient amplitude to cause reverse current to flow through the base-emitter junction of Q1080, and insure rapid turn-off. CR1081 and CR1082 clamp the base of Q1080 at an approximate −4 volt level during transformer flyback.

Damping Circuit

When the Current Driver stage Q1080 is turned off and stops conducting current through T1085, the magnetic field in T1085 collapses very rapidly. After this flyback time, high amplitude ringing is generated in T1085. Q1090,

Q1091, and Q1094 and their associated circuitry make up a damper circuit designed to suppress this ringing.

When the Turn On circuit generates the turn-on pulse for Q1080, the negative movement at the collector of Q1064 is coupled through C1093, CR1092, and R1095 to the base of Q1091. The resultant narrow negative-going pulse at the base of Q1091 starts to turn off Q1091 and Q1094. The positive movement at the collector of Q1065 is also coupled back to the Damping Circuit and applied to the base of Q1090 through CR1090 and R1090. Q1090 turns off, and its collector goes negative, which serves to hold Q1091 and Q1094 off.

When Q1080 is turned off, its collector steps positive to a level determined by the clamping action of VR1085 and VR1084. T1085 transforms this into a negative movement at the cathode of CR1091 to hold Q1091 and Q1094 off. The negative movement at the collector of Q1065 is applied to the base of Q1090 through CR1090 and R1090, turning Q1090 on. About five to ten microseconds after the turn-off time of Q1080, flyback ends, ringing occurs in T1085 and CR1091 turns off. Q1091 and Q1094 are turned on by Q1090 and conduct very heavily through the full-wave bridge rectifier CR1096-CR1099 and one winding of T1085 to reduce the amplitude of the ringing. The damping transistors Q1091 and Q1094 thus conduct only during the time flyback ringing is occurring.

C1095, CR1095, and the transformer winding connected to the cathode of CR1095 form a half-wave rectifier power supply generating approximately –5 volts to be used in the Damping Circuit.

Regulator Circuit

The Regulator Circuit holds the outputs of the Power Supply relatively constant despite variations in input line voltage, line frequency, and load demand. Regulation is accomplished by varying the time interval between current pulses conducted in the primary winding of T1085 by Q1080.

C1136 and R1132 comprise a timing circuit to determine the interval between the regulating pulses. C1136 charges toward the voltage level at pin 6 of U1130 through R1132 and CR1132. When the charge on C1136 reaches a level about 0.6 volt more positive than the voltage level at the gate of Q1138, Q1138 conducts current to discharge C1136 and, at the same time, forward bias the base-emitter junction of Q1150. When the current flow through Q1138 falls below the level necessary to keep Q1138 on, Q1138 will turn off and C1136 will start to charge again.

When Q1138 turns on, Q1150, which is quiescently biased off, turns on and conducts a current pulse through the primary winding of T1150. T1150 couples a negative-going pulse to the base of Q1040 through CR1040. Q1040 turns on and its collector moves positive to turn on Q1050, which starts the sequence of events necessary to generate a turn-on pulse for Q1080.

The time interval between pulses generated in the Regulator circuit is altered by monitoring variations in the –15 volts supply. For example, when heavy load demands are being made on the –15 volt supply it attempts to go positive. This positive movement results in a positive movement in the voltage level at pin 6 of U1130. A more positive level at pin 6 of U1130 shortens the amount of time required by C1136 to charge to the level at which Q1138 turns on. This results in more turn-on pulses being generated for Q1080, thereby increasing the amount of energy transferred through T1085 per unit of time.

POWER SUPPLY SECONDARY

General

The Power Supply Secondary circuit rectifies the AC voltages present in the secondary windings of Power Transformer T1085 to provide the necessary DC supply voltages to the instrument circuitry. A schematic of this circuit is shown on diagram 10 at the rear of this manual.

Rectifier Circuits

All of the rectifier circuits in the Power Supply Secondary are half-wave rectifiers. LII02, LII04, and LII06 provide added filtering for the +115 volt, +15 volt, and the –15 volt supplies respectively. T1100 provides common-mode inductance to suppress the 25-kilohertz interference originating in the power supply circuit. The High-Voltage supply is a series of ten half-wave rectifier power supplies. Total output voltage of the supply is approximately 4.1 kilovolts for use in the CRT circuit. CR1199 provides DC filament voltage to the CRT.

CRT CIRCUIT

General

The CRT Circuit contains the control circuitry necessary for operation of the cathode-ray tube (CRT). Fig. 3-14 shows a detailed block diagram of the CRT circuit. A schematic of this circuit is shown on diagram 11 at the rear of this manual.

Unblanking Amplifier

The Unblanking Amplifier circuit controls the CRT intensity level from several inputs. The effect of these input signals is to either increase or decrease the trace intensity, or to completely blank portions of the display. A portion of integrated circuit U940A is used to convert the voltage

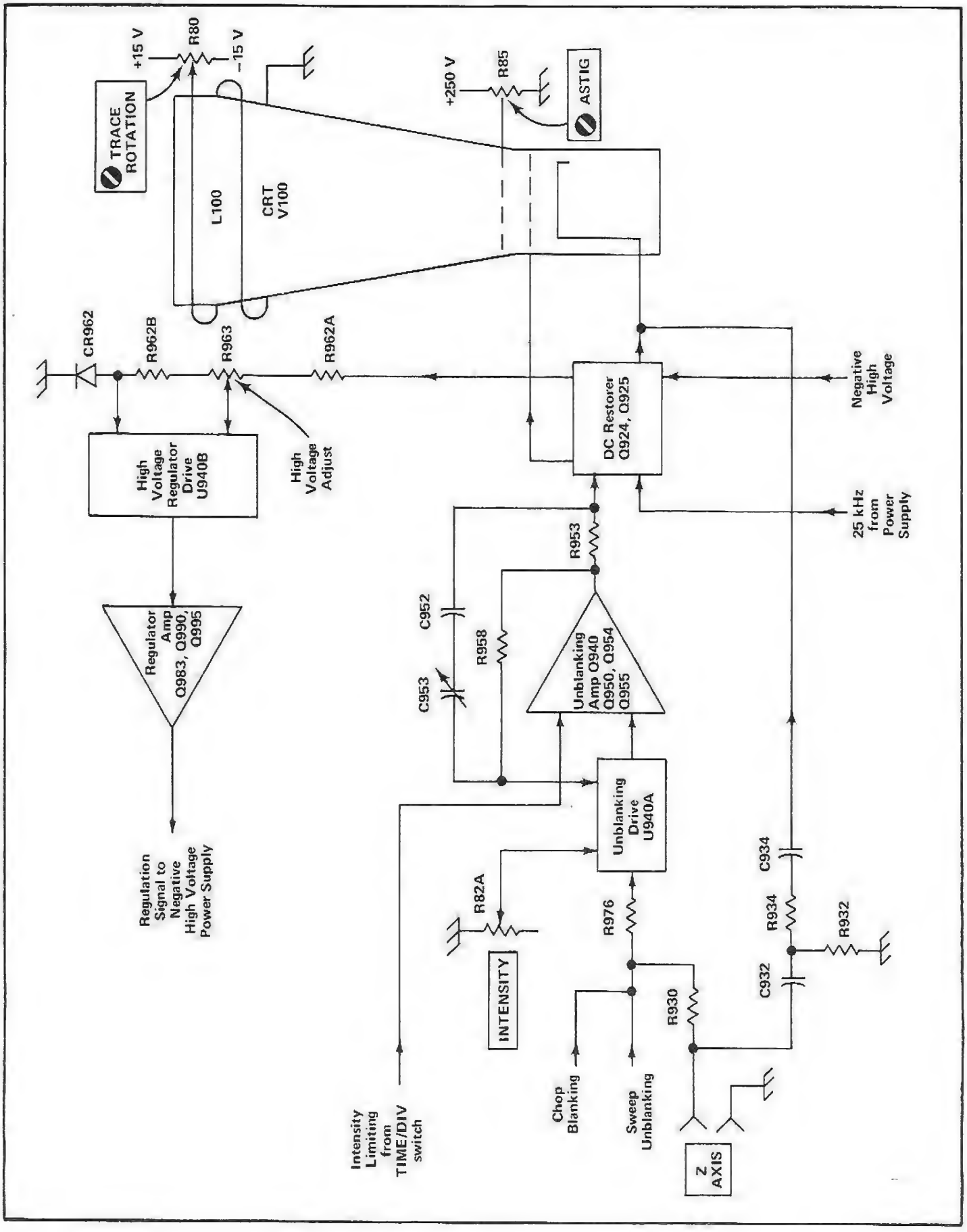

Fig. 3-14. CRT Circuit detailed block diagram.

signals present at the amplifier inputs into current variations to drive the output portion of the Unblanking Amplifier. CRT intensity variations are accomplished in the following manner.

When a sweep starts, the DC level present at pin 2 of U940A steps negative, resulting in a reduced current flow from pin 9 of U940A. This reduction in current increases the forward bias on Q954 and reduces the forward bias on Q955. Q954 conducts harder, resulting in a positive movement at the emitter of Q954. This positive movement is coupled through C942 to the emitter of Q940 and starts a positive movement at the collector of Q940. At the same time that this is occurring, Q955 is decreasing its conduction through R955 and Q950, which causes a positive movement to occur at the collector of Q950, which reinforces and sustains the positive movement started by Q940. At the end of the sweep, conditions are reversed. The DC level at pin 2 of U940A steps positive, causing increased current flow from pin 9 of U940A and the collectors of Q940 and Q950 move negative. The variations in DC level at the collectors of Q940 and Q950 are connected to the DC Restorer circuit.

To reduce the possibility of burning the CRT phosphor, the emitter voltage of Q940 is changed by the TIME/DIV switch, S700A. In the 50 ms/DIV position and up, the TIME/DIV switch applies +115 volts to the junction of R943 and VR944. In all switch positions below 50 ms/DIV, +115 volts is no longer connected to the junction of R943 and VR944. Instead, the emitter of Q940 is returned to +115 volts through R942, R943, and VR944. This produces a less positive level at the emitter of Q940 to limit the collector level of Q940 and Q950 which protects the CRT phosphor in these switch positions.

DC Restorer Circuit

Q924 and Q925 form a complementary amplifier, each side of which conducts on a half cycle of the waveform coupled through T920 from the secondary of the power supply transformer. The voltage on the collector of Q924 is determined by the output of the Unblanking Amplifier. On the positive half cycle, Q924 saturates and the common emitters seek the Q924 collector voltage. On the negative half cycle, Q925 saturates and the common emitters go to ground potential.

C924, C925, CR926, CR928, and R928 form a DC restorer network. All DC voltage levels in this circuit are referenced to the negative high-voltage potential. The voltage difference across R928 approximately equals the voltage swing present on the common emitters of Q924 and Q925. The upper end of R928 is more positive than the lower end, but negative with respect to the CRT cathode. Varying the drive signal to the Unblanking Amplifier changes the voltage level at the amplifier output, which in turn varies the amplitude of the voltage swing on the common emitters of Q924 and Q925, thereby resulting in changes to the CRT bias. CR924 and CR925 limit the positive excursion that can occur at the collector of Q924 and the common emitters of Q924 and Q925 respectively. CRT Grid Bias adjustment R980 determines the level of the range of adjustment of the INTENSITY control. CR935 provides protection to the CRT if the grid tries to rise more positive than the cathode.

High Voltage Regulator

Feedback from the high-voltage circuit is connected to pin 20 of integrated circuit U940B. Any change in this sample of the high-voltage level produces an in-phase error signal at pin 17 of U940B which is amplified and inverted through Q989, Q990, and Q995. Regulation occurs as follows:

If the negative high-voltage level attempts to go positive (less negative), a sample of this positive-going voltage is applied to pin 20 of U940B. This results in a positive-going error signal at pin 17 of U940B which is applied to the base of Q989 through CR982. Q989 amplifies and inverts this error signal, which receives further amplification through Q990 and Q995. The resulting negative movement at the collector of Q995 is applied to the positive pole of the minus high-voltage supply, and is of sufficient amplitude to maintain the output level of the supply.

VR985 through VR990 prevent more than 900 volts from appearing across Q989, Q990, and Q995 to prevent exceeding the maximum voltage rating of these devices in the event of circuit failure. CR983 prevents the base of Q989 from going more negative than about −0.5 volt. R963 adjust the negative high-voltage power supply for the proper output voltage.

CRT Control Circuits

Focus of the CRT display is determined by the Focus control R82B. This control is part of voltage divider R962C, R968, R82B, R83, R962D, R962E between the negative high-voltage and ground. Therefore, the voltage applied to the focus grid is more positive (less negative) than the voltage on either the control grid or cathode. R968 sets the range of adjustment of the Focus control. The Focus control is ganged with the front-panel INTENSITY control, and is automatically adjusted when changes are made in the INTENSITY setting. The ASTIG adjustment R85, which is also adjusted to obtain a well-defined display, varies the positive level on the astigmatism grid. Geometry adjustment R967 varies the positive level on the horizontal deflection plate shield to control the overall geometry of the display. The TRACE ROTATION adjustment R80 controls the current through L100, which varies the magnetic field around the CRT to horizontally align the CRT trace.

CALIBRATOR

General

The Calibrator circuit produces a square-wave output with accurate amplitude and frequency. This output is available as a square-wave voltage at the PROBE CAL 0.6 V 1 kHz connector. Fig. 3-15 shows a detailed block diagram of the Calibrator circuit. A schematic of this circuit is shown on diagram 11 at the back of this manual.

Multivibrator

Q905 and Q910 along with their associated circuitry comprise an astable multivibrator. Basic frequency of the multivibrator is determined by the RC combination of R906, R910, and C906. R904 provides a measure of adjustment of Calibrator frequency.

In the Calibrator Multivibrator, Q905 and Q910 are never both conducting at the same time. Assume for purposes of explanation that Q905 has just turned off and Q910 has turned on. When Q905 turns off, its collector moves positive, which also pulls the base of Q910 positive. This positive movement turns Q910 on and charges C906 positive. Immediately, the emitter of Q905 begins to discharge toward −15 volts. When the Q905 side of C906 has discharged sufficiently to forward bias the base-emitter junction of Q905, Q905 turns on and its collector moves negative. The negative movement at the collector of Q905 turns off Q910. Now the emitter circuit of Q910 begins to discharge toward −15 volts. When the Q910 side of C906 has discharged sufficiently to forward bias the base-emitter junction of Q910, Q910 turns on. At the time Q910 turns on, a positive movement is coupled from the emitter of Q910 to the emitter of Q905 by C906. This positive movement at the emitter of Q905 reduces the current flow through Q905, causing a reinforcing positive movement at the base of Q910. Q905 rapidly turns off as Q910 turns on. The square wave signal at the collector of Q910 is connected to the Output Amplifier.

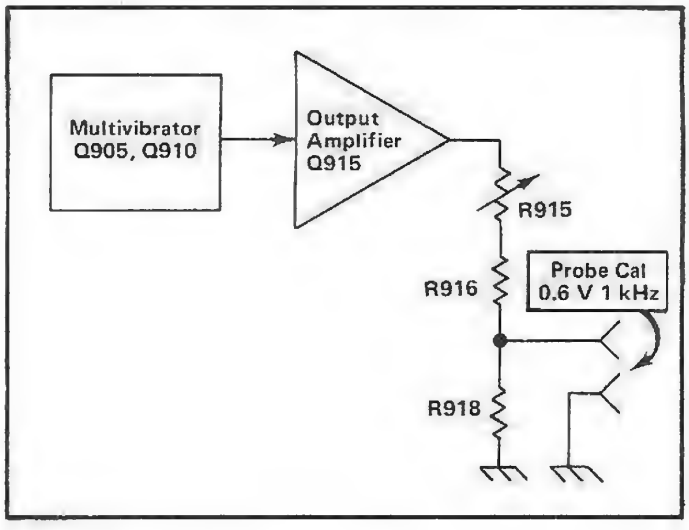

Fig. 3-15. Calibrator detailed block diagram.

Output Amplifier

The output signal from the Calibrator Multivibrator stage overdrives Q915 to produce an accurate square wave at the output. When the base of Q915 goes positive, Q905 is cut off and the output signal drops negative to ground. When the base goes negative, Q915 is driven into saturation and the collector of Q915 rises positive to about +15 volts. The output voltage is connected from the voltage divider R915-R916-R918 to the PROBE CAL 0.6 V 1 kHz connector. R915 adjusts the overall ratio of the voltage divider to provide an accurate output voltage amplitude.

STORAGE CIRCUIT

The Storage Circuit provides the voltage levels necessary to operate the flood guns, collimation electrodes and target backplates. The storage cathode-ray tube has two targets for split-screen operation; therefore, two identical erase generators are provided, each consisting of an Erase Multivibrator and a Target Control Amplifier. These circuits produce an erase waveform which will erase written information. Additional circuitry includes the Enhance Generator, which permits very fast single sweeps to be stored, and the INTEGRATE switch, which permits a stored image of a number of repetitive sweeps, each of which would be too fast to store alone as a single sweep event. Fig. 3-16 shows a detailed block diagram of the Storage Circuit.

Storage Tube Basic Operating Principles

The CRT used in the 434 is a direct-view storage cathode ray tube with a split screen viewing area that permits each half to be individually operated for stored displays. Storage, which is the retention on the CRT screen of a displayed event, is based on a secondary emission principle. A stream of primary electrons strikes an insulated target surface with sufficient energy to dislodge secondary electrons. As the potential increases, each primary electron dislodges more than one secondary electron, resulting in the target material charging positive. The target approaches the backplate potential, yielding a higher energy flood electron and resulting in light output.

The storage cathode ray tube contains special storage elements in addition to the conventional writing gun elements. The operating mode of the tube depends primarily on the voltages applied to these storage electrodes. With one condition of applied potentials, the storage screen or target backplate operates in the ready-to-write state; then, when it is bombarded with high energy writing beam current, the bombarded portion shifts to the stored mode to store a written display. With a different set

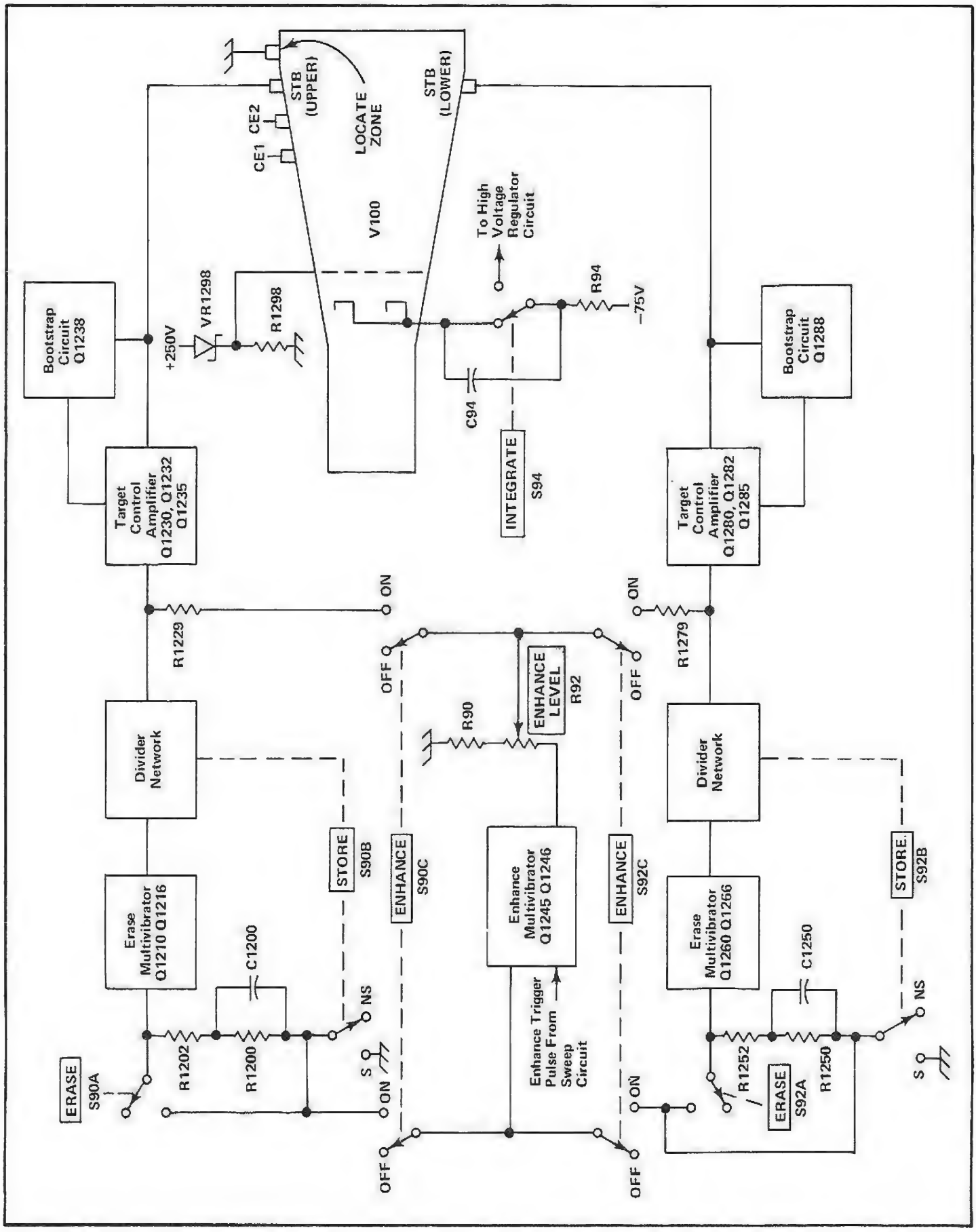

Fig. 3-16. Storage circuit detailed block diagram.

of applied voltages, the screen (target) operates in the conventional mode, similar to a conventional cathode ray tube.

The storage screens contain a special coated surface which continues to emit light when bombarded by the flood gun electrons, provided the surface has been written by the writing gun beam and shifted to the stored state. The two targets are electrically isolated from each other, which allows simultaneous presentations of stored information on one half and non-store (conventional) information on the other half of the viewing area.

Fig. 3-17 illustrates the basic construction of the 434 storage tube. The flood guns are low-energy electron guns which direct a large area flow, or cones, of electrons toward the entire screen. The collimation electrodes shape the flood spray for uniform coverage of the storage targets. The operating level of the tube is the potential difference between the target backplates and the flood gun cathodes. The collimation electrodes have no effect on the bombarding energy of the flood gun electrons.

In the store mode ready-to-write state, the insulator surface of the target tends to charge down to a potential lower than the backplate potential, and toward the potential of the flood gun cathode. This is due to flood gun current from the insulator surface. The potential to which the target charges is called its rest potential. This potential is such that the flood gun electron landing energy is not enough to illuminate the phosphor in the target. The target is now ready to write. See Fig. 3-18.

In the writing process, the target is scanned by the writing gun electrons. These high energy electrons increase the target secondary emission over the area they scan, so that the ratio of secondary current to primary current becomes greater than one. (This is shown in Fig. 3-18 as the first crossover point.) When this ratio exceeds one, that part of the bombarded surface shifts to a new stable state. Writing has been accomplished and this segment of the target is now stored.

In the written state, the potential difference between the flood gun cathode and target becomes greater and the flood gun electrons now have a landing energy that is sufficient to provide a visual display. This visual display will continue as long as the flood gun beam covers the target.

At high sweep rates, the writing beam current is not adequate to bring the portion of the target scanned above the crossover point; therefore, the flood gun electrons when landing on the bombarded area will remove the charge developed by the writing gun electrons, and the target will discharge to its initial ready-to-write state without being

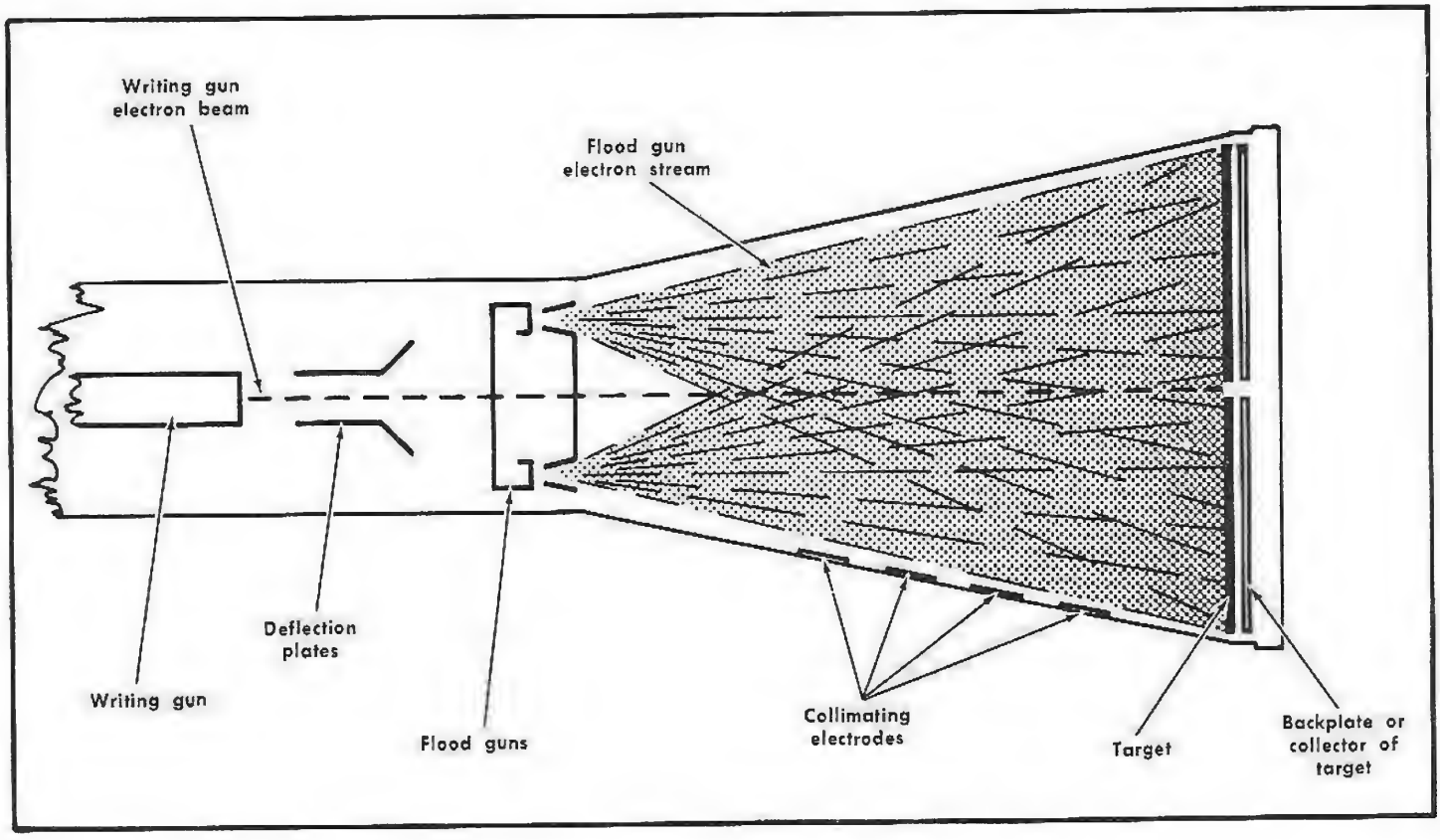

Fig. 3-17. Pictorial diagram of storage tube CRT.

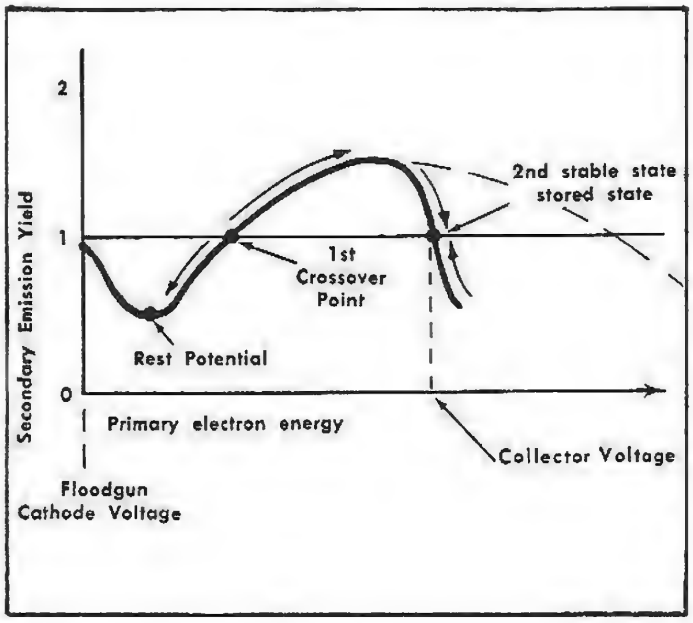

Fig. 3-18. Secondary emission curve.

written. Thus, complete writing is a function of writing beam current density.

When the stored display is no longer desired, the information is erased by a waveform as illustrated in Fig. 3-19. A positive-going pulse is first applied, to raise the backplate voltage above the writing threshold and write the entire target area with flood gun electrons. Next, the backplate voltage is pulled well below the rest potential, then as the backplate voltage is gradually returned, the target is charged to the rest potential and the target is in the ready-to-write state.

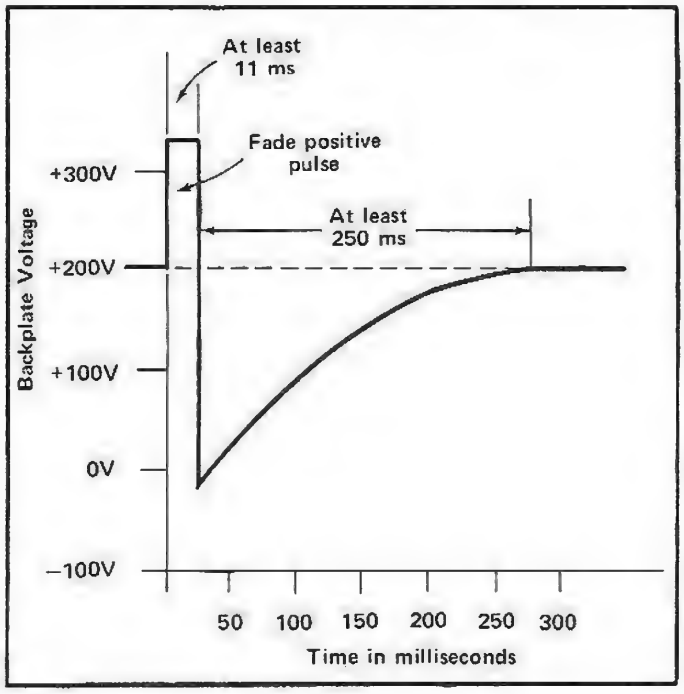

Fig. 3-19. Typical erase cycle waveform.

For a comprehensive study of storage tube operating principles, a Tektronix Circuit Concepts paperback book entitled "Storage Cathode-Ray Tubes and Circuits" is available through your local Tektronix, Inc., Field Office or representative. Tektronix Stock No. 062-0861-00.

Flood Guns and Collimation Electrodes

Two low-energy electron guns, or flood guns, are used in the 434. The cathodes are returned to −75 volts through INTEGRATE switch S94 and R94. R1298 and VR1298 set the level of the flood-gun control grid at approximately +140 volts.

The collimation electrodes serve as an electrostatic lens to distribute the flood gun electrons uniformly over the storage target, and they have no effect on the landing energy of the electrons. R1293 and R1925 determine the voltage levels of CE1 and CE2 through emitter followers Q1294 and Q1296 respectively. R1292 is an additional CRT Geometry adjustment.

Target Control Amplifiers

The Target Control Amplifiers are incorporated to maintain a high degree of control of the upper and lower storage backplate voltages. These are emitter-follower feedback amplifiers consisting of Q1230, Q1232, and Q1235 for the upper target backplate and Q1280, Q1282, and Q1285 for the lower target backplate. A bootstrapping circuit is provided for each Target Control Amplifier to maintain transistor operating voltage during the positive-going portion of the erase waveform (fade positive). The bootstrapping circuits will be described in full detail in the Erase Generator discussion.

A separate STORE switch is provided for each Target Control Amplifier, S90B (upper) and S92B (lower), allowing the target backplates to be operated individually. In the STORE mode, that is, when the STORE buttons are pushed in and the CRT is shifted to the ready-to-write state, the backplate voltages are adjusted individually by the Store Level controls, R1226 and R1276. These adjustments set the value of current to the feedback amplifier null points (Q1230 and Q1280 emitters). In the non-store, or conventional mode, the backplate voltages are established by adjustment of the Non-Store Level adjustments R1224 and R1274.

Erase Generator

NOTE

The following description applies to both erase generators; however, the circuit numbers used are those of the upper circuit.

In order to erase the stored display, a fade-positive pulse is first applied to the storage target backplate. This increases the potential difference between the flood gun cathodes and target backplate, raising the operating level above the upper writing limit and writing the entire target area with flood gun electrons. Next, the backplate voltage is pulled negative, well below the retention theshold. Then as the backplate is gradually returned, the target is charged to the rest potential and returned to the ready-to-write state. The following paragraphs describe how the erase waveform is generated.

The Erase Multivibrator is composed of Q1210, Q1216, and their associated circuitry. This is a monostable multivibrator with Q1210 quiescently saturated and Q1216 biased off. The collector of Q1216 is clamped slightly above ground by the conduction of CR1219. C1214 is charged to the voltage difference between the junction of R1214-R1212 and the collector level of Q1216.

When the ERASE button is pushed, the contacts of S90A are closed, grounding R1203. This produces a negative-going step which turns Q1210 off and Q1216 on. The collector of Q1216 moves down very close to −15 volts as the transistor saturates and conducts current through R1218 and R1239. The output of the feedback amplifier steps positive pulling the target backplate with it. This increases the operating level of the CRT and the entire target area is written.

When Q1216 turns on, the negative-going step produced at its collector is also coupled through C1214, which turns CR1212 off, ensuring cutoff of Q1210. C1214 begins to discharge through R1214, and after an RC-controlled period of time the current through R1214 has diminished sufficiently to allow the voltage at the anode of CR1212 to rise above the turn-on level. The base of Q1210 is also raised to the turn-on level, and the multivibrator is switched back to its quiescent state.

While Q1216 is conducting, the charge on C1219 is removed. When Q1216 turns off, its collector rises rapidly and is clamped slightly above ground by CR1219. This produces a positive-going step which is coupled through C1219, reverse biasing CR1220. This positive movement is applied to the input of the feedback amplifier, causing the output to step sharply negative well below the rest potential. As C1219 charges, the voltage at the junction of R1220-R1222 decays at an RC-controlled rate until CR1220 turns on and clamps it at about −15.5 volts. This negative-going sawtooth voltage is applied to the feedback amplifier, which produces a positive-going sawtooth at its output to raise the backplate to the ready-to-write state.

When the CRT is shifted from the conventional mode to the store mode, pushing the store button grounds C1200, which produces a negative trigger to switch the Erase Multivibrator to prepare the target for storage by applying an erase waveform. Bootstrapping maintains operating voltage for Q1232 and Q1235 during the fade-positive portion of the erase waveform when the emitter of Q1235 is pulled positive. The voltage drop across zener diode VR1236 sets the base of Q1238 approximately 120 volts below the emitter of Q1235. This voltage drop is kept constant under dynamic conditions by the essentially constant current established through R1236, which is clamped by the Q1238 forward bias voltage. When the emitter of Q1235 is suddenly stepped positive by the erase waveform, the base of Q1238 is stepped positive by the same amplitude. Q1238 emitter follows the base, and the positive-going step is coupled through C1235 to raise the collector of Q1235 positive by essentially the same amplitude as that at its emitter, thus maintaining a fairly constant collector-to-emitter voltage. This action reverse biases CR1235, temporarily disconnecting the +300-volt supply. When the fade positive pulse is terminated and the emitter of Q1235 is pulled negative, CR1237 turns off, disconnecting the bootstrap circuit and allowing the collector of Q1235 to return to its +300-volt level.

Enhance Generator

Writing speed is primarily a function of the writing gun beam current density and physical properties of the storage tube. At very fast sweep speeds, the writing beam does not charge the scanned portion of the target sufficiently to shift it to the stored state, and the flood gun electrons discharge the small deposited charge back down to the rest potential before the next sweep.

Writing beyond the normal writing speed of the CRT is attained through the process of enhancement or integration. First to be discussed will be enhancement.

The enhance generator produces an approximate two-millisecond negative-going pulse which is applied to the feedback amplifier summing point, resulting in a positive-going pulse to the target backplate. This conditions the target so that less writing gun current is required to shift the scanned section to the stored state.

Q1245, Q1246, and their associated circuitry form a monostable multivibrator. Operation of this circuit is

similar to that described for the Erase Multivibrator. When either ENHANCE switch (S90C or S92C) is pushed in, Q1245 has a conduction path to ground through R1245. Q1245 saturates and the low voltage-level at the collector of Q1245 keeps Q1246 turned off. The negative-going portion of the Enhance Trigger pulse from the Sweep circuit is coupled through C1240 to switch the Enhance Multivibrator. Q1245 turns off and Q1246 turns on. The collector of Q1246 snaps down to about −15 volts producing a negative-going step which is coupled through C1246, and turns off CR1245. The length of time that the multivibrator remains in this state, and thus the pulse width, is determined by the values of R1244 and C1246. The setting of the ENHANCE LEVEL control, R92, determines the amplitude of the pulse which is applied to the feedback amplifier summing point.

Integrate

The second fast writing technique to be discussed is integration. In this mode of operation, the flood gun beam is interrupted momentarily, allowing the writing gun beam to sum small amounts of charge for successive sweeps so that when the flood electrons are again turned on, the scanned target area shifts to the stored state. This is accomplished by pressing the INTEGRATE switch, S94, which disconnects the flood gun cathodes. This also connects −75 volts to the error signal input terminal of the high-voltage regulator circuit through R960 to shift the high voltage slightly, correcting for the deflection sensitivity changes that occur when the flood guns are turned off. Releasing the INTEGRATE switch, then, allows the display to shift to the stored state.

SECTION 4
MAINTENANCE

Change information, if any, affecting this section will be found at the rear of the manual.

Introduction

This section of the manual contains maintenance information for use in preventive maintenance, corrective maintenance or troubleshooting of the 434.

Cabinet Removal

WARNING

Dangerous potentials exist at several points throughout this instrument. When the instrument is operated with the covers removed, do not touch exposed connections or components. Some transistors may have elevated cases. Disconnect power before cleaning the instrument or replacing parts.

The cabinet can be removed from the oscilloscope as follows:

1. Unwrap the power cord from the instrument feet.

2. Loosen the phillips-head screw located in each instrument foot. See Fig. 4-1.

3. Remove the rear ring assembly from the rear of the instrument.

4. Slide the cabinet to the rear and remove the oscilloscope.

The R432 can be removed from its cabinet in a similar manner. To replace the instrument in its wrap-around cabinet, reverse the removal procedure. The portable wrap-around cabinet should be installed with the carrying handle pivot points positioned toward the bottom of the instrument.

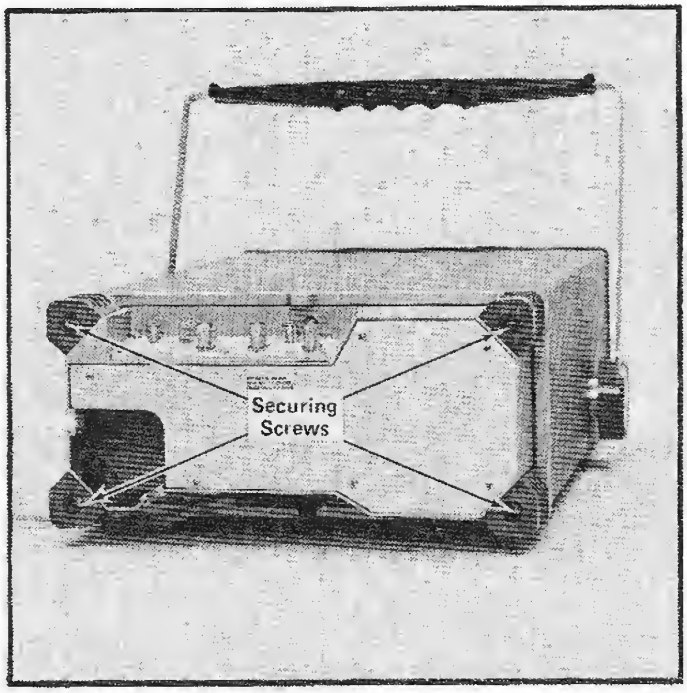

Fig. 4-1. Removing wrap-around cabinet.

PREVENTIVE MAINTENANCE

General

Preventive maintenance consists of cleaning, visual inspection, lubrication, etc. Preventive maintenance performed on a regular basis may prevent instrument breakdown and will improve the reliability of this instrument. The severity of the environment to which the 434 is subjected determines the frequency of maintenance. A convenient time to perform preventive maintenance is preceding recalibration of the instrument.

Cleaning

General. The 434 should be cleaned as often as operating conditions require. Accumulation of dirt in the instrument can cause overheating and component breakdown. Dirt on components acts as an insulating blanket and prevents efficient heat dissipation. It also provides an electrical conduction path which may result in instrument failure.

The cabinet provides protection against dust in the interior of the instrument. Operation without the cabinet in place necessitates more frequent cleaning. The front cover provides dust protection for the front panel and the CRT face. The front cover should be installed for storage or transportation.

CAUTION

Avoid the use of chemical cleaning agents which might damage the plastics used in this instrument. Avoid chemicals which contain benzene, toluene, xylene, acetone or similar solvents.

Exterior. Loose dust accumulated on the outside of the 434 can be removed with a soft cloth or small paint brush. The paint brush is particularly useful for dislodging dirt on and around the front-panel controls. Dirt which remains can be removed with a soft cloth dampened in a mild detergent and water solution. Abrasive cleaners should not be used.

CRT. Clean the blue plastic light filter and the CRT face with a soft, lint-free cloth dampened with denatured alcohol or a mild detergent and water solution. The optional CRT mesh filter can be cleaned in the following manner.

1. Hold the filter in a vertical position and brush lightly with a soft No. 7 watercolor brush to remove light coatings of dust and lint.

2. Greasy residues or dried-on dirt can be removed with a solution of warm water and a neutral pH liquid detergent. Use the brush to lightly scrub the filter.

3. Rinse the filter thoroughly in clean water and allow to air dry.

4. If any lint or dirt remains, use clean low-pressure air to remove. Do not use tweezers or other hard cleaning tools on the filter, as the special finish may be damaged.

5. When not in use, store the mesh filter in a lint-free dust-proof cantainer such as a plastic bag.

Interior. Dust in the interior of the instrument should be removed occasionally due to its electrical conductivity under high-humidity conditions. The best way to clean the interior is to blow off the accumulated dust with dry, low-pressure air. Remove any dirt which remains with a soft paint brush or a cloth dampened with a mild detergent and water solution. A cotton-tipped applicator is useful for cleaning in narrow spaces or for cleaning circuit boards.

Lubrication

The reliability of potentiometers, cam switches and other moving parts can be maintained if they are kept properly lubricated. Lubricate switch detents with a heavier grease (e.g., Tektronix Part No. 006-0219-00). Potentiometers which are not permanently sealed should be lubricated with a lubricant which does not affect electrical characteristics (e.g., Tektronix Part No. 006-0220-00). A lubrication kit containing these lubricants and instructions is available from Tektronix, Inc. Order Tektronix Part No. 003-0342-01. The only portions of a cam switch that require lubrication are the detents and the bushings. No lubricant should be applied to the cams or contacts of a cam switch. The correct lubricant for the detents and bushings is available by ordering Tektronix Part No. 006-1353-00.

Transistor Checks

Periodic checks of the transistors in the 434 are not recommended. The best check of transistor performance is actual operation in the instrument. More details on checking transistor operation are given under Troubleshooting.

Recalibration

To assure accurate measurements, check the calibration of this instrument after each 1000 hours of operation or every six months if used infrequently. In addition, replacement of components may necessitate recalibration of the affected circuits. Complete calibration instructions are given in the Calibration section.

The calibration procedure can also be helpful in localizing certain troubles in the instrument. In some cases, minor troubles may be revealed and/or corrected by recalibration.

TROUBLESHOOTING

Introduction

The following information is provided to facilitate troubleshooting of the 434. Information contained in other sections should be used along with the following information to aid in locating the defective component. An understanding of the circuit operation is very helpful in locating troubles. See the Circuit Description section for complete information.

Troubleshooting Aids

Diagrams. Complete circuit diagrams are given on fold-out pages in the Diagrams section. The component number and electrical value of each component in this instrument are shown on the diagrams. Important voltages and waveforms are also shown on the diagrams. The portions of the circuit mounted on the circuit boards are enclosed with a blue line.

Circuit Boards. Figs. 8-1 through 8-23 in the Diagrams section show the circuit boards used in the 434. Fig. 4-5 shows the location of each board within the instrument. Each electrical component on the boards is identified by its circuit number. These pictures, used along with the diagrams, aid in locating the components mounted on the circuit boards.

Wiring Color-Code. All insulated wire and cable used in the 434 is color-coded to facilitate circuit tracing. Table 4-1 gives the wiring color-code for the power-supply voltages used in this instrument.

TABLE 4-1

Power Supply Wiring Color Code

Supply	Background Color	Stripe
−15 volt	Purple	Black
+15 volt	Red	Black
+115 volt	Red	Brown
+250 volt	Red	Orange

Resistor Color-Code. In addition to the brown composition resistors, metal-film resistors and some wire-wound resistors are used in the 434. The resistance of a wire-wound resistor is printed on the body of the component. The resistance values of composition resistors and metal-film resistors are color-coded on the components with EIA color-code (some metal-film resistors may have the value printed on the body). The color-code is read starting with the stripe nearest the end of the resistor. Composition resistors have four stripes which consist of two significant figures, a multiplier and a tolerance value (see Fig. 4-2). Metal-film resistors have five stripes consisting of three significant figures, a multiplier and a tolerance value.

Capacitor Marking. The capacitance values of common disc capacitors and small electrolytics are marked in microfarads on the side of the component body. The white ceramic capacitors used in the 434 are color coded in picofarads using a modified EIA code (see Fig. 4-2).

Diode Color-Code. The cathode end of each glass-encased diode is indicated by a stripe, a series of stripes or a dot. For most silicon or germanium diodes with a series of stripes, the color-code identifies the three significant digits

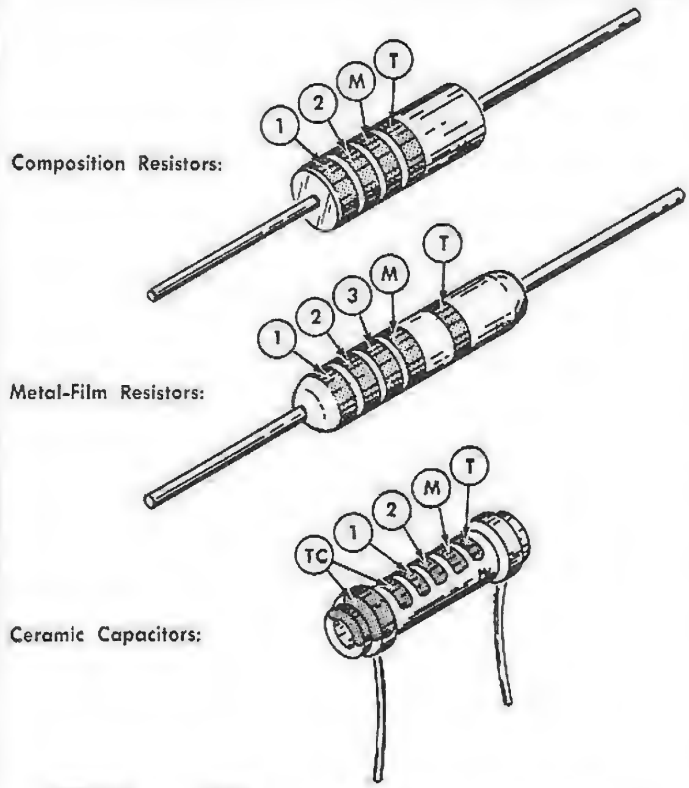

Resistor and Capacitor Color Code

Color	Significant Figures	Multiplier: Resistors	Multiplier: Capacitors	Tolerance: Resistors	Tolerance: Capacitors
Silver	---	10^{-2}	---	±10%	---
Gold	---	10^{-1}	---	±5%	---
Black	0	1	1	---	±20% or 2 pF*
Brown	1	10	10	±1%	±1% or 0.1 pF*
Red	2	10^{2}	10^{2}	±2%	±2%
Orange	3	10^{3}	10^{3}	±3%	±3%
Yellow	4	10^{4}	10^{4}	±4%	+100% −0%
Green	5	10^{5}	10^{5}	±0.5%	±5% or 0.5 pF*
Blue	6	10^{6}	10^{6}	---	---
Violet	7	---	---	---	---
Gray	8	---	10^{-2}	---	+80% −20% or 0.25 pF*
White	9	---	10^{-1}	---	±10% or 1 pF*
(none)	---	---	---	±20%	±10% or 1 pF*

*For capacitance of 10 pF or less.

(1) (2) and (3) —1st, 2nd and 3rd significant figures;
(M) —multiplier; (T) —tolerance;
(TC) —temperature coefficient.

NOTE: (T) and/or (TC) color code for capacitors depends upon manufacturer and capacitor type. May not be present in some cases.

Fig. 4-2. Color-code resistors and ceramic capacitors.

of the Tektronix Part Number using the resistor color-code system (e.g., a diode color-coded pink or blue-brown-gray-green indicates Tektronix Part Number 152-0185-00). The cathode and anode ends of a metal-encased diode can be identified by the diode symbol marked on the body. See Fig. 4-3.

Semiconductor Lead Configuration. Fig. 4-4 shows the lead configurations of the semiconductors used in this instrument. This view is as seen from the bottom of the device.

Troubleshooting Equipment

The following equipment is useful for troubleshooting the 434.

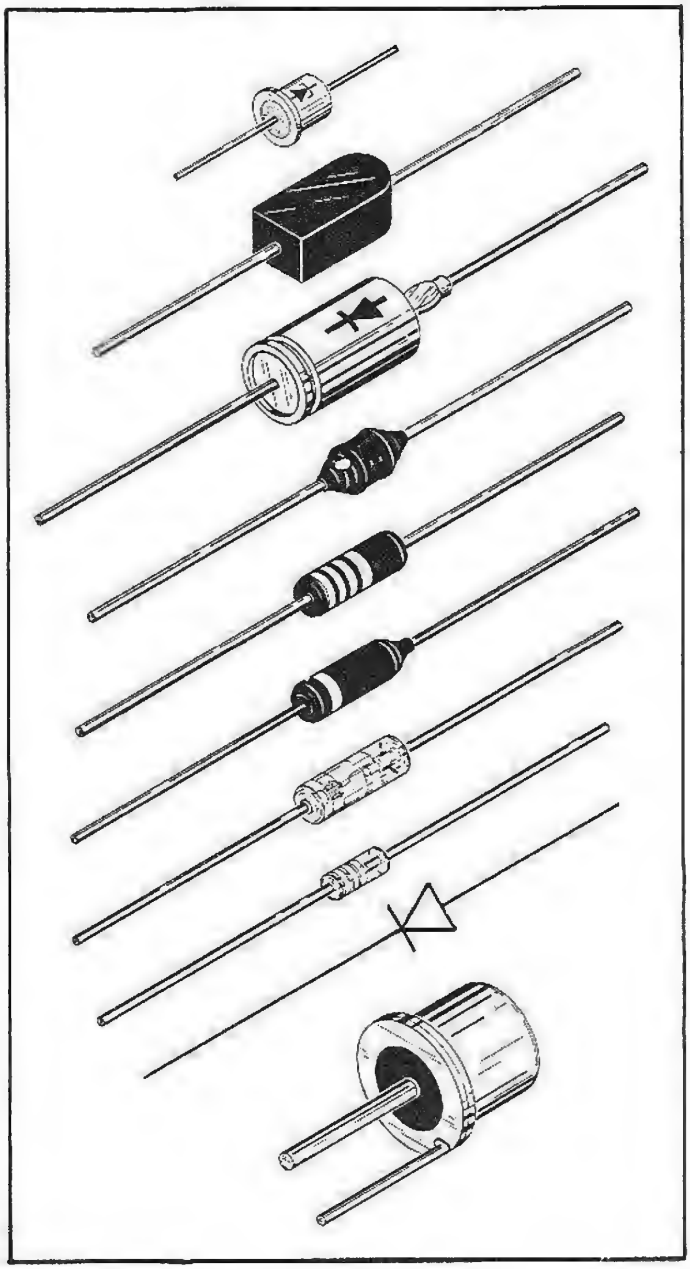

Fig. 4-3. Diode polarity markings.

1. Transistor Tester

   Description: Tektronix Type 576 Transistor-Curve Trace or equivalent.

   Purpose: To test semiconductors used in this instrument.

2. Multimeter

   Description: VTVM, 10 megohm input impedance and 0 to 500 volts range; ohmmeter, 0 to 50 megohms. Accuracy, within 3%. Test probes must be insulated to prevent accidental shorting.

   Purpose: To check voltages and for general troubleshooting in this instrument.

   NOTE

   A 20,000 ohms/volt VOM can be used to check the voltages in this instrument if allowances are made for the circuit loading of the VOM at high-impedance points.

3. Test Oscilloscope

   Description: DC to 25 MHz frequency response, one millivolt to five volts/division deflection factor. A 10X probe should be used to reduce circuit loading.

   Purpose: To check waveforms in this instrument.

4. Isolation Transformer

   Description: Primary to secondary ratio of 1:1; capable of supplying operating power for this instrument.

   Purpose: To isolate power input of this instrument from ground to allow grounding points in the internal power supply for troubleshooting purposes.

Troubleshooting Techniques

This troubleshooting procedure is arranged in an order which checks the simple trouble possibilities before proceeding with extensive troubleshooting. The first few checks assure proper connection, operation and calibration. If the trouble is not located by these checks, the remaining steps aid in locating the defective component. When the defective component is located, it should be replaced following the replacement procedures given under Corrective Maintenance.

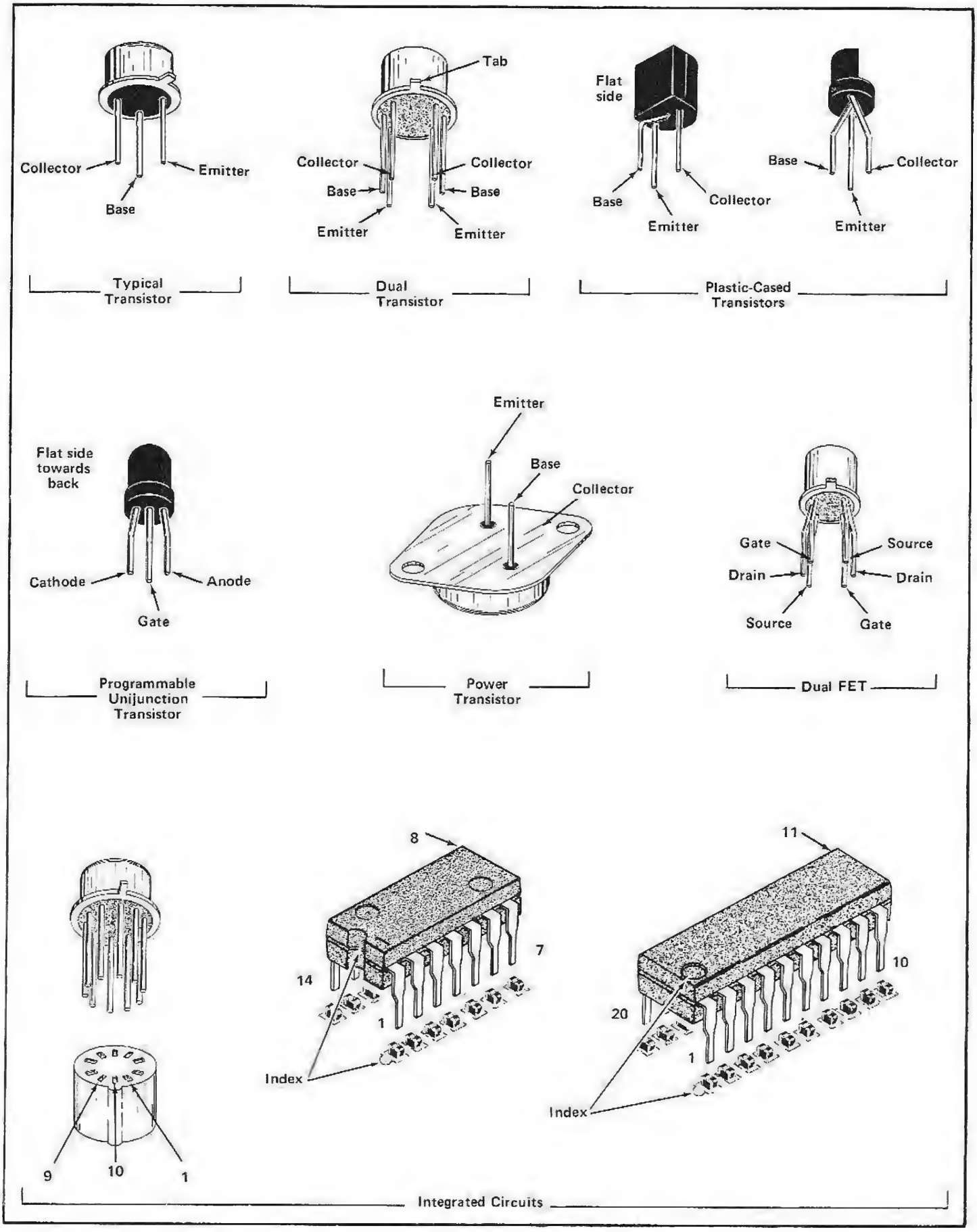

Fig. 4-4. Electrode configuration for semiconductors used in this instrument.

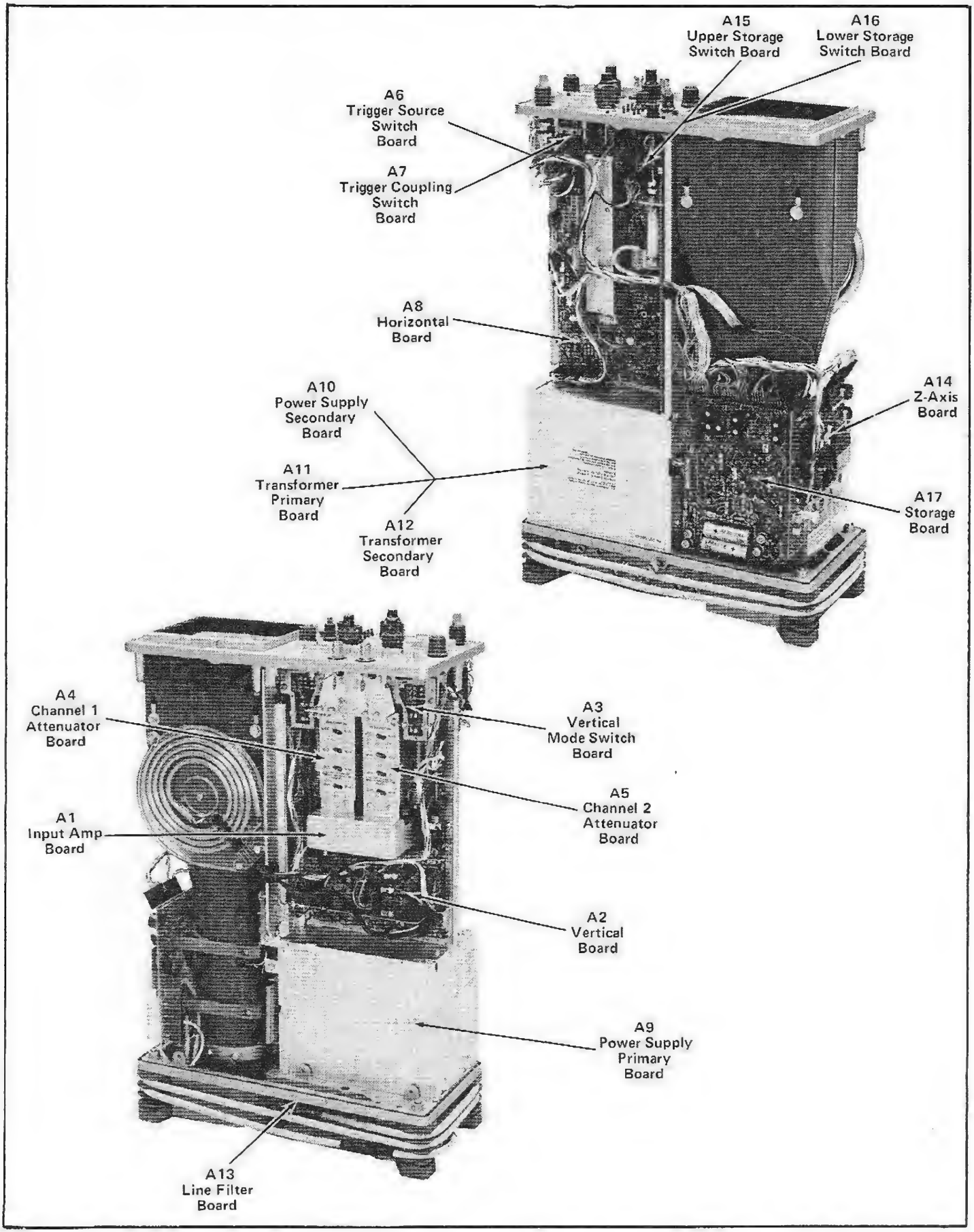
A15
Upper Storage
Switch Board
A16
Lower Storage
Switch Board
A6
Trigger Source
Switch
Board
A7
Trigger Coupling
Switch
Board
A8
Horizontal
Board
A10
Power Supply
Secondary
Board
A11
Transformer
Primary
Board
A12
Transformer
Secondary
Board
A14
Z-Axis
Board
A17
Storage
Board
A4
Channel 1
Attenuator
Board
A3
Vertical
Mode Switch
Board
A1
Input Amp
Board
A5
Channel 2
Attenuator
Board
A2
Vertical
Board
A9
Power Supply
Primary
Board
A13
Line Filter
Board

1. Check Control Settings. Incorrect control settings can indicate a trouble that does not exist. If there is any question about the correct function or operation of any control, see the Operating Instructions section.

2. Check Associated Equipment. Before proceeding with troubleshooting of the 434, check that the equipment used with this instrument is operating correctly. Check that the signal is properly connected and that the interconnecting cables are not defective. Also, check the power source.

3. Visual Check. Visually check the portion of the instrument in which the trouble is located. Many troubles can be located by visual indications such as unsoldered connections, broken wires, damaged circuit boards, damaged components, etc.

4. Check Instrument Calibration. Check the calibration of this instrument, or the affected circuit if the trouble appears in one circuit. The apparent trouble may only be a result of misadjustment or may be corrected by calibration. Complete calibration instructions are given in the Calibration section.

5. Isolate Trouble to a Circuit. To isolate trouble to a circuit, note the trouble symptom. The symptom often identifies the circuit in which the trouble is located. For example, poor focus indicates that the CRT circuit (includes high voltage) is probably at fault. When trouble symptoms appear in more than one circuit, check affected circuits by taking voltage and waveform readings.

Incorrect operation of all circuits often indicates trouble in the power supply. Check first for correct voltage of the individual supplies. However, a defective component elsewhere in the instrument can appear as a power-supply trouble and may also affect the operation of other circuits. Table 4-2 lists the tolerances of the power supplies in this instrument. If a power-supply voltage is within the listed tolerance, the supply can be assumed to be working correctly. If outside the tolerance, the supply may be misadjusted or operating incorrectly. Use the procedure given in the Calibration section to adjust the power supplies.

TABLE 4-2

Power Supply Tolerance and Ripple

Power Supply	Tolerance	Maximum Ripple (Peak-to-peak)	
		Line Frequency	25 Kilohertz
–15 volt	Within 0.113 volt	10 mV	40 mV
+15 volt	Within 0.225 volt	10 mV	40 mV
+115 volt	Within 4.6 volts	0.5 volt	0.5 volt
+250 volt	Within 10 volts	1 volt	1 volt
–75 volt	Within 2.25 volts	1 volt	1 volt

After the defective circuit has been located, proceed with steps 6 through 8 to locate the defective component(s).

6. Check Circuit Board Interconnections. After the trouble has been isolated to a particular circuit, check the pin connectors on the circuit board for correct connection. Figs. 8-1 through 8-23 show the correct connections for each board.

The pin connectors used in this instrument also provide a convenient means of circuit isolation. For example, a short in a power supply can be isolated to the power supply itself by disconnecting the pin connectors for that voltage at the remaining boards.

7. Check Voltages and Waveforms. Often the defective component can be located by checking for the correct voltage or waveform in the circuit. Typical voltages and waveforms are given on the diagrams.

NOTE

Voltages and waveforms given on the diagrams are not absolute and may vary slightly between instruments. To obtain operating conditions similar to those used to take these readings, see the first diagram page.

8. Check Individual Components. The following procedures described methods of checking individual components in the 434. Components which are soldered in place are best checked by disconnecting one end. This isolates the measurement from the effects of surrounding circuitry.

A. TRANSISTORS. The best check of transistor operation is actual performance under operating conditions. If a transistor is suspected of being defective, it can best be checked by substituting a new component or one which has been checked previously. However, be sure that circuit conditions are not such that a replacement transistor might also be damaged. If substitute transistors are not available, use a dynamic tester (such as Tektronix Type 576). Static-type testers are not recommended, since they do not check operation under simulated operating conditions.

CAUTION

The POWER switch must be turned off before removing or replacing transistors.

B. DIODES. A diode can be checked for an open or shorted condition by measuring the resistance between terminals. With an ohmmeter scale having an internal source of between 800 millivolts and 3 volts, the resistance should be very high in one direction and very low when the meter leads are reversed.

CAUTION

Do not use an ohmmeter scale that has a high internal current. High currents may damage the diode. Do not measure tunnel diodes with an ohmmeter; use a dynamic tester (such as a Tektronix Type 576 Transistor-Curve Tracer).

C. RESISTORS. Check the resistors with an ohmmeter. See the Electrical Parts List for the tolerance of the resistors used in this instrument. Resistors normally do not need to be replaced unless the measured value varies widely from the specified value.

D. INDUCTORS. Check for open inductors by checking continuity with an ohmmeter. Shorted or partially shorted inductors can usually be found by checking the waveform response when high frequency signals are passed through the circuit. Partial shorting often reduces high-frequency response (roll-off).

E. CAPACITORS. A leaky or shorted capacitor can best be detected by checking resistance with an ohmmeter on the highest scale. Do not exceed the voltage rating of the capacitor. The resistance reading should be high after initial charge of the capacitor. An open capacitor can best be detected with a capacitance meter or by checking whether the capacitor passes AC signals.

9. Repair and Readjust the Circuit. If any defective parts are located, follow the replacement procedures given in this section. Be sure to check the performance of any circuit that has been repaired or that has had any electrical components replaced.

CORRECTIVE MAINTENANCE

General

Corrective maintenance consists of component replacement and instrument repair. Special techniques required to replace components in this instrument are given here.

Obtaining Replacement Parts

Standard Parts. All electrical and mechanical part replacements for the 434 can be obtained through your local Tektronix Field Office or representative. However, many of the standard electronic components can be obtained locally in less time than is required to order them from Tektronix, Inc. Before purchasing or ordering replacement parts, check the parts list for value, tolerance, rating and description.

NOTE

When selecting replacement parts, it is important to remember that the physical size and shape of a component may affect its performance in the instrument, particularly at high frequencies. All replacement parts should be direct replacements unless it is known that a different component will not adversely affect instrument performance.

Special Parts. In addition to the standard electronic components, some special components are used in the 434. These components are manufactured or selected by Tektronix, Inc. to meet specific performance requirements, or are manufactured for Tektronix, Inc. in accordance with our specifications. These special components are indicated in the Electrical Parts List by an asterisk preceding the part number. Most of the mechanical parts used in this instrument have been manufactured by Tektronix, Inc. Order all special parts directly from your local Tektronix Field Office or representative.

Ordering Parts. When ordering replacement parts from Tektronix, Inc., include the following information:

1. Instrument type.

2. Instrument serial number.

3. A description of the part (if electrical, include circuit number).

4. Tektronix Part Number.

Soldering Techniques

WARNING

Disconnect the instrument from the power source before soldering.

Circuit Boards. Use ordinary 60/40 solder and a 35- to 40-watt pencil type soldering iron on the circuit boards. The tip of the iron should be clean and properly tinned for best heat transfer to the solder joint. A higher wattage soldering iron may separate the wiring from the base material.

The following technique should be used to replace a component on a circuit board. Most components can be replaced without removing the boards from the instrument.

CAUTION

The Vertical Mode Switch, the attenuator and the Vertical Input Amplifier circuit boards are made of material easily damaged by excessive heat. When soldering to these boards, do not use a soldering iron with a rating of more than approximately 15 watts. Avoid prolonged applications of heat to circuit-board connections.

1. Grip the component lead with long-nose pliers. Touch the soldering iron to the lead at the solder connection. Do not lay the iron directly on the board as it may damage the board.

2. When the solder begins to melt, pull the lead out gently. This should leave a clean hole in the board. If not, the hole can be cleaned by reheating the solder and placing a sharp object such as a toothpick into the hole to clean it out. A vacuum-type desoldering tool can also be used for this purpose.

3. Bend the leads of the new component to fit the holes in the board. If the component is replaced while the board is mounted in the instrument, cut the leads so they will just protrude through the board. Insert the leads into the holes in the board so the component is firmly seated against the board (or as positioned originally). If it does not seat properly, heat the solder and gently press the component into place.

4. Touch the iron to the connection and apply a small amount of solder to make a firm solder joint; do not apply too much solder. To protect heat-sensitive components, hold the lead between the component body and the solder joint with a pair of long-nose pliers or other heat sink.

5. Clip the excess lead that protrudes through the board (if not clipped in step 3).

6. Clean the area around the solder connection with a flux-remover solvent. Be careful not to remove information printed on the board.

Metal Terminals. When soldering metal terminals, ordinary 60/40 solder can be used. Use a soldering iron with a 40- to 75-watt rating and a 1/8-inch wide wedge-shaped tip.

Observe the following precautions when soldering metal terminals:

1. Apply only enough heat to make the solder flow freely. Use a heat sink to protect heat-sensitive components.

2. Apply only enough solder to form a solid connection. Excess solder may impair the function of the part.

3. If a wire extends beyond the solder joint, clip off the excess.

4. Clean the flux from the solder joint with a flux-remover solvent.

Component Replacement

WARNING

Disconnect the instrument from the power source before replacing components.

Circuit Board Replacement. If a circuit board is damaged beyond repair, either the entire assembly including all soldered-on components, or the board only, can be replaced. Part numbers are given in the Mechanical Parts List for either the completely wired or the unwired board. Most of the components mounted on the circuit boards can be replaced without removing the boards from the instrument. Observe the soldering precautions given under Soldering Techniques in this section.

Most of the connections to the circuit boards in the instrument are made with pin connectors. However, some connections are soldered to the board. Use the following procedure to remove a circuit board:

1. Disconnect all pin connectors from the board and unsolder any soldered connections.

2. Remove all screws holding the board to the chassis.

3. Lift the circuit board out of the instrument. Do not force or bend the board.

4. To replace the board, reverse the order of removal. Correct location of the pin connectors is shown in Figs. 8-1 through 8-23. Replace the pin connectors carefully so they mate correctly with the pins. If forced into place incorrectly positioned, the pin connectors may be damaged.

Transistor Replacement. Transistors should not be replaced unless actually defective. If removed from their sockets during routine maintenance, return them to their original sockets. Unnecessary replacement of transistors may affect the calibration of this instrument. When transistors are replaced, check the operation of that part of the instrument which may be affected.

CAUTION

POWER switch must be turned off before removing or replacing transistors.

Replacement transistors should be of the original type or a direct replacement. Fig. 4-4 shows the lead configuration of the transistors used in this instrument. Some plastic case transistors have lead configurations which do not agree with those shown here. If a transistor is replaced by a transistor made by a different manufacturer than the original, check the manufacturer's basing diagram for correct basing. All transistor sockets in this instrument are wired for the basing used for metal-case transistors. Transistors which have heat radiators or are mounted on the chassis use silicone grease to increase heat transfer. Replace the silicone grease when replacing these transistors.

WARNING

Handle silicone grease with care. Avoid getting silicone grease in the eyes. Wash hands thoroughly after use.

Cathode-Ray Tube Replacement. Use care when handling a CRT. Protective clothing and safety glasses should be worn. Avoid striking it on any object which might cause it to crack or implode. When storing a CRT, place it face down on a smooth surface with a protective cover or soft mat under the faceplate to protect it from scratches.

The CRT shield should also be handled carefully. This shield protects the CRT display from distortion due to magnetic interference. If the shield is dropped or struck sharply, it may lose its shielding ability.

The following procedure outlines the removal and replacement of the cathode-ray tube:

A. REMOVAL:

1. Remove the wrap-around cabinet as described previously.

2. Remove the light filter.

3. Remove the cover plate from the rear casting.

4. Remove the socket from the base of the CRT.

5. Remove the Z Axis Circuit Board from the instrument.

6. Disconnect the deflection plate leads from the neck of the CRT. Be careful not to bend or excessively squeeze the pins.

7. Remove the two screws securing the rear of the CRT shield to the rear casting.

8. Remove the delay-line assembly from the CRT shield by removing the lone screw in the middle of the delay line.

9. Remove the two screws securing the CRT shield to the front casting.

10. Remove the CRT assembly from the instrument.

11. Loosen the CRT clamp at the rear of the CRT shield.

12. Hold one hand on the CRT faceplate and push forward on the CRT base with the other. As the CRT starts out of the shield, grasp it firmly. When the CRT is free of the clamp, slide the shield completely off the CRT.

B. REPLACEMENT:

1. Loosen the four hex-head screws on the front part of the CRT shield.

2. Insert the CRT into the shield. Loosen the two securing screws inside the rear of the CRT shield. Be sure the faceplate of the CRT is flush or slightly recessed with the front opening of the CRT shield. Do not tighten the CRT clamp yet.

3. Place the light mask over the CRT faceplate and re-insert the CRT assembly into the instrument. Be sure the CRT faceplate seats properly in the front casting. The lip on the upper edge of the front of the CRT shield must engage the slot in the front casting.

4. Replace the two screws securing the rear of the CRT shield to the rear casting.

5. Seat the CRT firmly against the front casting, making sure the light mask is positioned correctly. Correctly align the CRT in the opening in the front casting by positioning and tightening the four hex-head screws loosened previously in step 1. Also tighten the three screws inside the rear of the CRT shield. Recommended tightening torque for the clamp screw is 4 to 7 inch/lbs.

6. Install the CRT socket on the base of the CRT.

7. Install the Z Axis Circuit Board.

8. Reconnect the deflection plate leads on the neck of the CRT. Be careful not to bend or excessively squeeze the pins.

9. Re-install the delay-line assembly on the bottom of the CRT shield.

10. Re-install the cover plate on the rear casting.

11. Re-install the CRT light filter in the front casting.

12. Recheck instrument calibration.

Fuse Replacement. The only fuse used in the instrument is the power-line fuse. Use only a 1 1/2 ampere fast-blow fuse as a replacement.

Power Transformer Replacement. If the power transformer becomes defective, contact your local Tektronix Field Office or representative for a warranty replacement (see warranty note in the front of this manual). Be sure to replace only with a direct replacement Tektronix transformer. After the transformer is replaced, check the performance of the complete instrument.

The components located in the power-supply compartment can be reached for maintenance by using the following procedure:

1. Remove the wrap-around cabinet from the instrument as described earlier in this section.

2. Lay the instrument down flat with the power-supply compartment edge facing you.

3. Remove the two screws securing the compartment shield to the rear casting.

4. Loosen the two screws securing the compartment shield to the forward power-supply compartment bulkhead and slide the shield out of the instrument.

WARNING

Line AC, high voltage, and stored DC are present in this compartment. It is recommended the instrument not be operated with this shield removed.

After gaining access to the power-supply compartment, the power transformer assembly can be removed as follows:

1. Remove the Power Supply Secondary circuit board.

2. Remove the plastic insulating sheet that mounts beneath the Power Supply Secondary circuit board.

3. Remove the metal cover to the enclosure containing the power-supply transformer assembly.

4. Remove the transformer assembly from the enclosure. Be careful not to bend the pins.

Recalibration After Repair

After any electrical component has been replaced, the calibration of that particular circuit should be checked, as well as the calibration of other closely related circuits. Since the power supply affects all circuits, calibration of the entire instrument should be checked if work has been done in the power supply or if the transformer has been replaced.

Instrument Repackaging

If the 434 is to be shipped for long distances by commercial means of transportation, it is recommended that the instrument be repackaged in the original manner for maximum protection. The original shipping carton can be saved and used for this purpose. The Repackaging illustration in the Mechanical Parts Illustrations shows how to repackage the 434 and gives the part numbers for the repackaging components. New shipping cartons can be obtained from Tektronix, Inc. Contact your local Tektronix Field Office or representative.

SECTION 5
CALIBRATION

Change information, if any, affecting this section will be found at the rear of this manual.

Introduction

To assure instrument accuracy, check the calibration of the 434 every 1000 hours of operation, or every six months if used infrequently. Before complete calibration, thoroughly clean and inspect this instrument as outlined in the Maintenance section.

Tektronix Field Service

Tektronix, Inc. provides complete instrument repair and recalibration at local Field Service Centers and the Factory Service Center. Contact your local Tektronix Field Office or representative for further information.

Using This Procedure

To aid in locating a step in the Calibration procedure, an index is given prior to the complete procedure. Completion of each step in the full Calibration procedure insures that this instrument meets the electrical specifications given in Section 1. Where possible, instrument performance is checked before an adjustment is made. For best overall instrument performance when performing a complete calibration procedure, make each adjustment to the exact setting even if the CHECK— is within the allowable tolerance.

A partial calibration is often desirable after replacing components, or to touch up the adjustment of a portion of the instrument between major recalibration. To adjust only part of the instrument, set the controls as given under Preliminary Control Settings and start with the nearest Equipment Required List preceding the desired portion. To prevent unnecessary recalibration of other parts of the instrument, readjust only if the tolerance given in the CHECK— part of the step is not met. If re-adjustment is necessary, also check the calibration of any steps listed in the INTERACTION— part of the step.

IMPORTANT NOTE

All waveforms shown in this procedure were taken with a Tektronix Oscilloscope Camera System, unless otherwise noted. Limits, tolerances, and waveforms in this procedure are given as calibration guides and should not be interpreted as instrument specifications except as specified in Section 1.

TEST EQUIPMENT REQUIRED

General

The following test equipment and accessories, or their equivalent, are required for complete calibration of the 434. Specifications given for the test equipment are the minimum necessary for accurate calibration. Therefore, the specifications of any test equipment used must meet or exceed the listed specifications. All test equipment is assumed to be correctly calibrated and operating within the listed specifications. Detailed operating instructions for the test equipment are not given in this procedure. Refer to the instruction manual for the test equipment if more information is needed.

Special Calibration Fixtures

Special Tektronix calibration fixtures are used in this procedure only where they facilitate instrument calibration. These special calibration fixtures are available from Tektronix, Inc. Order by part number through your local Tektronix Field Office or representative.

Calibration Equipment Alternatives

All of the listed test equipment is required to completely calibrate this instrument. The Calibration procedure is based on the first item of equipment given as an example of applicable equipment. When other equipment is substituted, control settings or calibration setup may need to be altered slightly to meet the requirements of the substitute equipment. If the exact item of test equipment given as an example in the Test Equipment list is not available, first check the Specifications column carefully to see if any other equipment is available which might suffice. Then check the Usage column to see what this item of the test equipment is used for. If used for a check or adjustment which is of little or no importance to your measurement requirements, the item and corresponding step(s) can be deleted.

The following procedure is written to completely check and adjust the 434 to the Performance Requirements given in Section 1. If the applications for which you will use the 434 do not require the full available performance from the 434, this procedure and the required equipment list can be shortened accordingly. For example, only the basic measurement capabilities of this instrument can be verified by checking vertical deflection accuracy with a Standard Amplitude Calibrator, vertical square-wave response with fast-rise Square-Wave Generator (such as the Tektronix Type 106), and the horizontal timing using a Time-Mark Generator.

TEST EQUIPMENT

Description	Minimum Specifications	Usage	Example
1. Autotransformer with AC voltmeter	Capable of supplying 66 volt-Amperes at an output voltage of 120 VAC.	Power Supply adjustment.	General Radio W10MT3W Variac Autotransformer.
2. Test-oscilloscope system.	Bandwidth, DC to 25 megahertz; minimum deflection factor, five millivolts/division; accuracy, within 3%.	Adjust Power Supply operation, CRT grid bias, Sweep Generator offset adjustment, and Z-Axis Compensation.	a. Tektronix 7503 or 7504 Oscilloscope with 7A15 or 7A16 Amplifier and 7B50 or 7B52 Time-Base plug-in units, and P6053 Probe. b. Tektronix 432 Oscilloscope with a P6011 Probe and a P6006 Probe.
3. Precision DC voltmeter	Range, zero to 500 volts; accuracy, within 0.2%.	Calibrator output accuracy check and adjustment. Power Supply adjustment.	a. Tektronix 7D13 Digital Multimeter (test oscilloscope must have Readout System). b. Fluke Model 825A Differential DC Voltmeter.
4. DC voltmeter	Range, zero to 4000 volts; accuracy, checked to within 1% at −3940 volts.	High voltage power supply adjustment.	a. Triplett Model 630-NA. b. Simpson Model 262.
5. Time-mark generator	Marker outputs, 20 nanoseconds to 5 seconds; marker accuracy, within 0.1%.	CRT geometry check and adjustment. Horizontal timing check and adjustment. Calibrator repetition rate check and adjustment.	a. Tektronix 2901 Time-Mark Generator. b. Tektronix 184 Time-Mark Generator.
6. Medium-Frequency constant-amplitude signal generator	Frequency, 350 kilohertz to 25 megahertz; reference frequency, 50 kilohertz; output amplitude, variable from five millivolts to five volts peak to peak into 50 ohms; amplitude accuracy, constant within 3% of reference as output frequency changes.	External Z-axis operation check. Vertical amplifier bandwidth check. Trigger circuit check and adjustment.	a. Tektronix 191 Constant Amplitude Signal Generator. b. General Radio 1211-C with 1263-C Amplitude Regulating Power Supply.
7. Low-frequency signal generator	Frequency, 100 hertz to 30 kilohertz; output amplitude, variable from 35 millivolts to 40 volts.	Trigger circuit check and adjustment.	a. General Radio 1310-B Oscillator.
8. Standard Amplitude Calibrator	Amplitude accuracy, 0.25%; signal amplitude, 5 millivolts to 50 volts; output signal, one-kilohertz square wave.	Vertical amplifier gain check and adjustment. External and horizontal gain check.	a. Tektronix calibration fixture Part Number 067-0502-01.
9. Square-wave generator	Frequency, one kilohertz and 100 kilohertz; risetime, one nanosecond or less from fast-rise output.	Vertical amplifier compensation checks and adjustments.	a. Tektronix Type 106 Square-Wave Generator.

TEST EQUIPMENT (cont)

Description	Minimum Specifications	Usage	Example
10. Current Probe	Maximum Current, 5 A RMS.	Power Supply checks and adjustments. Not necessary for periodic recalibration.	a. Tektronix P6021 AC Current Probe with 011-0105-00 Passive Termination.
11. Adapter	Connectors, GR874 and BNC female.	Vertical amplifier bandwidth checks. Trigger circuit checks and adjustments.	a. Tektronix Part Number 017-0063-00.
12. Input normalizer	RC time constant, 24 picofarads times one megohm.	Standardize input RC time constant.	a. Tektronix Part Number 067-0539-00.
13. T connector	Connectors, BNC.	External trigger operation checks. External Z Axis operation check. ADD mode operation check.	a. Tektronix Part Number 103-0030-00.
14. Attenuator	Attenuation ratio, 10X; connectors BNC, impedance, 50 ohms.	Vertical amplifier compensation checks and adjustments.	a. Tektronix Part Number 011-0059-01.
15. Termination	Impedance, 50 ohms; accuracy, ±2%; connectors, BNC.	External Z Axis operation check. Vertical amplifier bandwidth check. Trigger circuit operation checks and adjustments.	a. Tektronix Part Number 011-0049-01.
16. Cable (two required)	Impedance, 50 ohms; type, RG-58/U; length, 42 inches; connectors, BNC.	Used throughout procedure for signal interconnection.	a. Tektronix Part Number 012-0057-01.
17. Screwdriver	Three-inch shaft, 3/32-inch bit.	Used throughout procedure to adjust variable resistors.	a. Xcelite R-3323.
18. Low-capacitance screwdriver	1 1/2-inch shaft.	Used throughout procedure to adjust variable capacitors.	a. Tektronix Part Number 003-0000-00.
19. Tuning tool	Fits 5/64-inch (ID) hex cores.	Vertical amplifier high-frequency compensation adjustments.	a. Tektronix Part Number 003-0307-00 (handle) and 003-0310-00 (insert).

INDEX TO CALIBRATION PROCEDURE

Power Supply and Display Adjustment

1. Preset Power Supply Current Sense Adjustment — Page 5-6
2. Adjust −15-Volt Power Supply — Page 5-7
3. Adjust Power Supply Current Sense Adjustment — Page 5-7
4. Adjust High-Voltage Power Supply — Page 5-8
5. Adjust CRT Grid Bias — Page 5-8
6. Adjust Focus Range and Astigmatism — Page 5-9
7. Adjust Trace Rotation — Page 5-9
8. Pre-Set Collimation and Storage Target Levels — Page 5-9
9. Adjust Upper and Lower Non-Store Levels — Page 5-9
10. Adjust Upper and Lower Store Levels — Page 5-10
11. Adjust Collimation — Page 5-11
12. Check Stored Writing Speed — Page 5-11
13. Adjust Geometry — Page 5-12
14. Check BEAM FINDER Operation — Page 5-12
15. Check External Z Axis Operation — Page 5-13
16. Check Chopped Operation — Page 5-13

Vertical System Adjustment

17. Adjust Channel 1 Balance — Page 5-14
18. Adjust Channel 2 Balance — Page 5-14
19. Adjust CH 1 and CH 2 GAIN — Page 5-15
20. Check CH 1 Variable VOLTS/DIV Range and Attenuator Accuracy — Page 5-15
21. Check CH 2 Variable VOLTS/DIV Range and Attenuator Accuracy — Page 5-16
22. Check ADD Mode Operation — Page 5-16
23. Adjust Channel 1 VOLTS/DIV Switch Compensation — Page 5-16
24. Adjust Channel 2 VOLTS/DIV Switch Compensation — Page 5-17
25. Adjust High Frequency Compensation — Page 5-17
26. Check Vertical Amplifier Bandwidth — Page 5-19
27. Check 5 MHz BW Bandwidth — Page 5-20

Trigger Circuit Adjustment

28. Adjust Trigger Level Centering — Page 5-21
29. Adjust CH 1 and COMP Trigger DC Level — Page 5-21
30. Check Trigger Circuit Operation — Page 5-22
31. Check Single Sweep Operation — Page 5-22
32. Check TRIGGER LEVEL Control Range — Page 5-23
33. Check Line Triggering — Page 5-23

Horizontal System Adjustment

34. Adjust Sweep Generator Offset Adjustment — Page 5-24
35. Adjust Sweep Cal Adjustment — Page 5-24
36. Adjust Horizontal Gain — Page 5-25
37. Adjust Magnifier Registration — Page 5-25
38. Check Variable TIME/DIV Range — Page 5-25
39. Adjust High Speed Timing — Page 5-25
40. Check TIME/DIV Accuracy — Page 5-26
41. Check Magnified Sweep Accuracy — Page 5-26
42. Check High Speed Magnified Timing Accuracy — Page 5-26
43. Check External Horizontal Sensitivity — Page 5-26

Calibrator Circuit Adjustment

44. Adjust Calibrator Output Voltage Amplitude — Page 5-27
45. Adjust Calibrator Repetition Rate — Page 5-27

Preliminary Procedure for Complete Calibration

NOTE

This instrument should be adjusted at an ambient temperature of +25°C (±5°C) for best overall accuracy.

1. Remove the wrap-around cabinet from the 434 in the manner given in section 4 of this manual.

2. Connect the autotransformer to a suitable power source.

NOTE

If a line voltage source of exactly 120 VAC RMS is available, it will not be necessary to use the autotransformer.

3. Connect the 434 to the autotransformer output.

4. Set the autotransformer output voltage for exactly 120 VAC RMS.

5. Set the controls as given under Preliminary Control Settings. Allow at least 30 minutes warmup before proceeding.

NOTE

Titles for external controls of this instrument are capitalized in this procedure (e.g., INTENSITY). Internal adjustments are initial capitalized only (e.g., Sweep Cal).

Preliminary Control Settings

Preset the instrument controls to the settings given below when starting a Calibration procedure.

POWER/INTENSITY	Pulled out and rotated fully counterclockwise
POSITION (vertical and horizontal)	Midrange
5 MHz BW	Pushed in
INVERT	Pushed in
Input Coupling	AC
Vertical Mode	CH 1
VOLTS/DIV	.1 V
Variable VOLTS/DIV	CAL
TRIGGER SOURCE	COMP
TRIGGER COUPLING	AC
TRIGGER LEVEL	Midrange
TRIGGER SLOPE	+
Sweep MODE	SINGLE SWEEP
TIME/DIV	1 ms
VAR TIME/DIV	CAL
ENHANCE LEVEL	Fully counterclockwise
STORE (upper & lower)	Non-store
ENHANCE (upper & lower)	Off

NOTES

POWER SUPPLY AND DISPLAY

Equipment Required

1. Test Oscilloscope
2. Medium-Frequency Constant-Amplitude Signal Generator
3. Time-Mark Generator
4. Precision DC Voltmeter
5. DC Voltmeter
6. Autotransformer
7. Current Probe
8. Adapter (GR874 and BNC female connectors)
9. 50 Ω BNC Termination
10. 42-Inch 50 Ω BNC Cables (2 ea.)
11. BNC T Connector
12. 3-Inch Screwdriver

Control Settings

Preset instrument controls to the settings given under Preliminary Control Settings.

1. Preset Power Supply Current Sense Adjustment

NOTE

This step need be performed only if the setting of R1074 has become grossly misadjusted, or if major circuit components in the power supply have been replaced that would cause the setting of R1074 to be incorrect. If the power supply portion of this instrument has been working correctly, proceed with step 2.

a. Turn off instrument power, disconnect the power line, and remove the power supply compartment shields to provide access to leads connected to transistor Q1080. See Fig. 5-1.

WARNING

Under certain conditions, C1016 can remain charged for several minutes. If one of the two neon bulbs on the Primary Power Supply circuit board is still lit with instrument power turned off, wait until both lights are extinguished before attempting to discharge C1016 and/or working in the power supply area.

b. Connect the P6021 Current Probe around the collector lead (grey-yellow wire to pin 2 of P102 on Power Supply Primary circuit board) of Q1080 with the arrow on the head of the Current Probe pointing to the collector of Q1080.

c. Connect the Passive Termination for the Current Probe to the input connector of the test oscilloscope and connect the Current Probe to the Passive Termination.

d. Reconnect the line cord and turn on instrument power to the 434 under test.

WARNING

Line AC, high voltage, and stored DC are present in the Power Supply compartment. Primary Power Supply circuit common and guard box are elevated to line voltage potential. Do not touch the guard box or connect test equipment ground leads to the circuit common without first connecting the 434 under test to the power line through a 1:1 ratio isolation transformer that is insulated for 600 volts or more between primary and secondary. Exercise extreme caution when working in this area with the compartment shields removed.

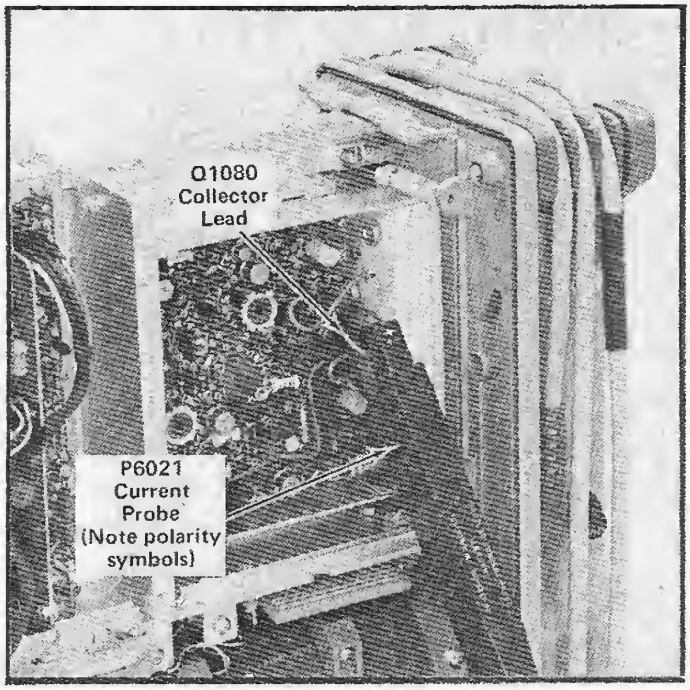

Fig. 5-1. Measuring Q1980 collector current.

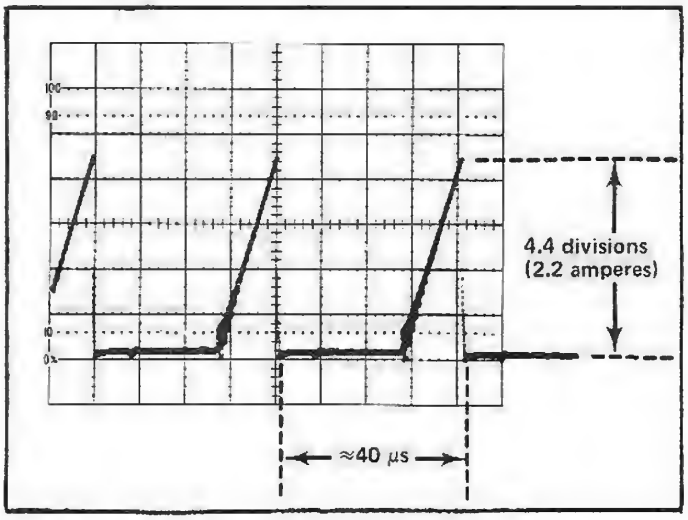

Fig. 5-2. Current waveform in collector circuit of Q1080.

e. Set the sensitivity of the Current Probe Passive Termination to 10 mA/mV and the Volts/Div switch of the test oscilloscope to 50 mV/div.

f. CHECK–Test oscilloscope display of 4.4 divisions peak to peak (peak current measurement of 2.2 amperes). See Fig. 5-2. Repetition rate should be approximately 25 kilohertz (40 μs period).

g. ADJUST–Current Sense adjustment R1074 (see Fig. 5-3) for peak to peak display amplitude of 4.4 divisions, ±0.2 division (2.2 amperes, ±0.1 ampere).

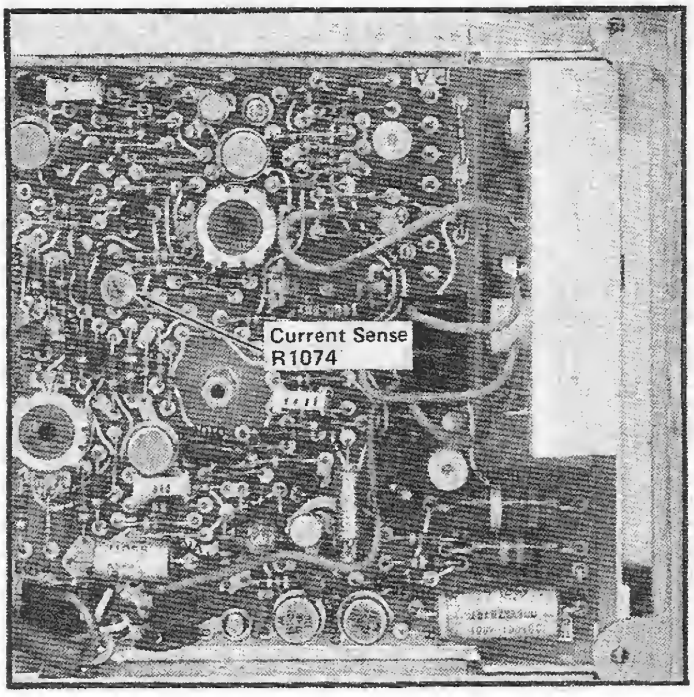

Fig. 5-3. Location of Current Sense adjustment R1070.

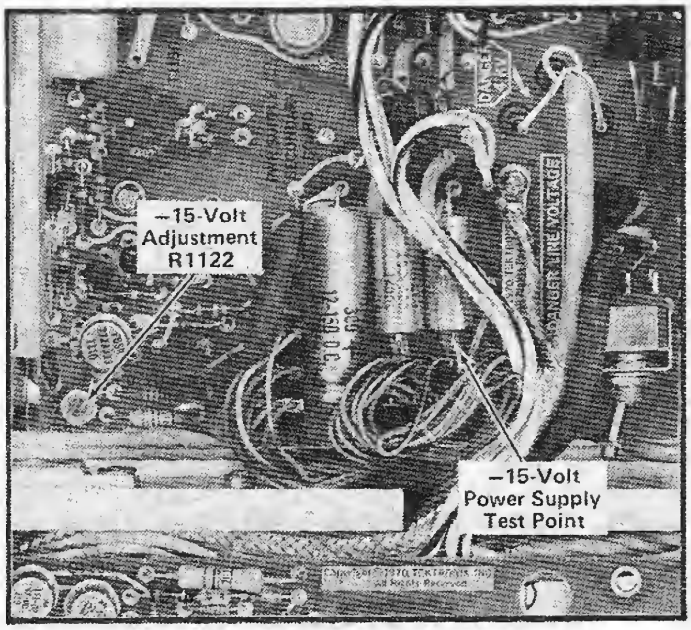

Fig. 5-4. Location of –15-Volt Power Supply Test Point.

2. Adjust –15-Volt Power Supply

a. Connect the Precision DC Voltmeter between the –15-volt power supply test point (negative lead of C1107 on Power Supply Secondary circuit board; see Fig. 5-4) and ground.

b. CHECK–Meter reading of –15 volts, ±0.112 volt (±0.187 volt if the measurement is being made outside of the +20°C to +30°C temperature range).

c. ADJUST– –15 Volts adjustment R1122 (see Fig. 5-4) for a meter reading of –15 volts, ±0.037 volt.

d. Disconnect the Precision DC Voltmeter from the 434 under test.

e. INTERACTION–May affect the operation of all circuits within the 432.

3. Adjust Power Supply Current Sense Adjustment

a. Obtain a display of the current waveform in the collector circuit of Q1080 in the manner given in Calibration Procedure step 1.

NOTE

If step 1 was not performed, the need for the Current Probe can be eliminated by monitoring the repetition rate of the Power Supply Primary circuit using a test oscilloscope with a voltage probe connected to pin 1 of plug P127 on the Z Axis circuit board.

b. CHECK–Test oscilloscope display for 40 microsecond time period between current peaks.

c. ADJUST–Current Sense adjustment R1074 (see Fig. 5-3) for 40 microseconds, ±one microsecond time period between current peaks.

d. Disconnect all test equipment and re-install the Power Supply compartment shields.

e. INTERACTION–May affect the operation of all circuits within the 432.

4. Adjust High-Voltage Power Supply

a. Connect the DC Voltmeter between the –3940 volt test point TP962 (see Fig. 5-5) and ground.

b. CHECK–Meter reading of –3940 volts, ±98.5 volts (±118.2 volts if the measurement is being made outside of the +20°C to +30°C temperature range).

c. ADJUST–High Voltage Adjust R963 (see Fig. 5-5) for a meter reading of –3940 volts, ±78.8 volts.

d. Disconnect the DC Voltmeter from the 432 under test.

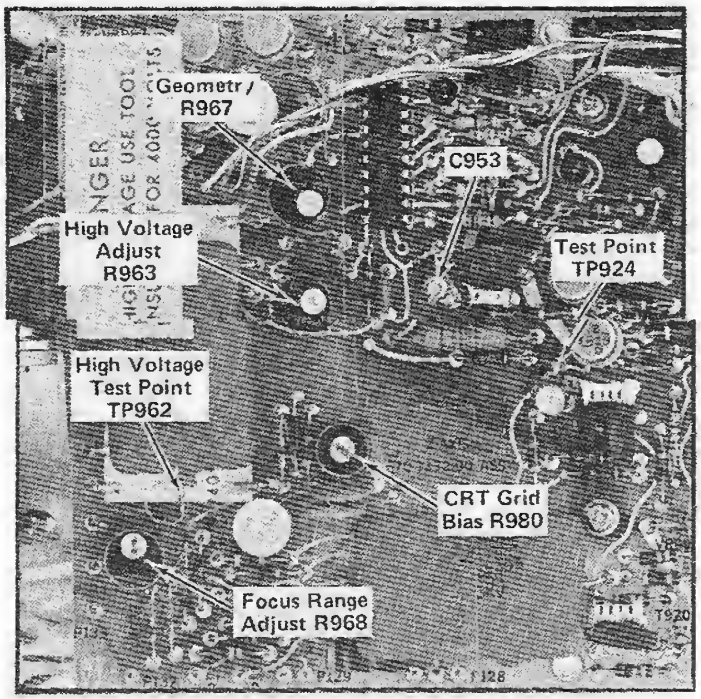

Fig. 5-5. CRT circuit test point and adjustment locations.

e. INTERACTION–May affect vertical gain, horizontal timing accuracy and CRT focus, astigmatism and geometry.

NOTE

If the line voltage is within the operating limits of the 432, (90 VAC to 264 VAC RMS), the 432 can be connected directly to the line, if not, leave the 432 connected to the autotransformer for the remainder of this procedure.

5. Adjust CRT Grid Bias and Z-Axis Compensation

a. Attach a 10X probe to the test oscilloscope and connect the tip of the probe to test point TP924 on the Z Axis circuit board. See Fig. 5-5.

b. Set the CH 1 POSITION control fully counterclockwise and the Sweep MODE to AUTO.

c. Turn the INTENSITY control fully clockwise.

d. Measure and note the maximum voltage level that can be attained with the INTENSITY control fully clockwise.

e. Reduce the setting of the INTENSITY control to a level 70 volts below the maximum level measured in step d.

f. Set the TIME/DIV switch to 5 s/DIV and CH 1 POSITION control to midrange.

CAUTION

To avoid possible damage to the CRT phosphor, do not allow a bright spot to remain stationary for an extended period of time.

g. ADJUST–CRT Grid Bias adjustment R980 (see Fig. 5-5) so the spot on the CRT just disappears.

h. Set the TIME/DIV switch to 1 ms and increase the INTENSITY control setting to obtain a visible display of nominal intensity.

i. Obtain a stable display on the test oscilloscope of the unblanking waveform present at test point TP924.

j. CHECK–Test oscilloscope display for optimum waveform, risetime and flat top.

k. ADJUST–C953 (see Fig. 5-5) for optimum waveform risetime and flat top.

l. Disconnect all test equipment.

6. Adjust Focus Range and Astigmatism

a. Connect the PROBE CAL 0.6 V 1 kHz signal to the CH 1 input connector.

b. Adjust the TRIGGER LEVEL control for a stable display and advance the INTENSITY control to a comfortable viewing level.

c. CHECK–CRT display for optimum focus of both the horizontal and vertical portions of the square wave. The display should remain in focus as the setting of the INTENSITY control is varied.

d. ADJUST–Focus Range adjust R968 (see Fig. 5-5) and ASTIG adjust R85 (located on rear panel) for optimum focus of both the horizontal and vertical portions of the display.

e. Disconnect the PROBE CAL 0.6 V 1 kHz signal from the CH 1 input connector.

7. Adjust Trace Rotation

a. Position the free-running trace to the center horizontal graticule line.

b. CHECK–The trace should be parallel with the center horizontal line.

c. ADJUST–TRACE ROTATION adjustment R80 (located on rear panel) so the trace is parallel with the horizontal graticule lines.

8. Pre-Set Collimation and Storage Target Levels

NOTE

If CRT storage performance has been satisfactory, no adjustment of the storage circuitry is necessary. Proceed with step 13. If it is desired to touch up storage calibration to improve operation of an instrument, proceed with step 9. If this calibration procedure is being performed on an instrument having unknown storage circuitry calibration (such as after replacing a CRT), continue with step 8.

a. Set the Sweep MODE to SINGLE SWEEP.

b. Connect the minus lead of a DC voltmeter to test point TP1236 and the plus lead of the meter to test point TP1294. See Fig. 5-6 for test point locations.

c. Adjust R1293 (CE-1, see Fig. 5-6) for a meter reading of 100 volts.

d. Move the plus lead of the meter to test point TP1296 (see Fig. 5-6).

e. Adjust R1295 (CE-2) for a meter reading of 100 volts.

f. Move the plus lead of the meter to test point TP1235.

g. Adjust Upper Non-Store Level R1224 for a meter reading of 90 volts.

h. Set the UPPER SCREEN STORE button to the STORE (button in) position.

i. Adjust Upper Store Level adjustment R1226 for a meter reading of 180 volts.

j. Set the UPPER SCREEN STORE button to non-store (button out) position and move the plus lead of the meter to test point TP1285 (see Fig. 5-6).

k. Adjust Lower Non-Store Level R1274 for a meter reading of 90 volts.

l. Set the LOWER SCREEN STORE button to the STORE (button in) position.

m. Adjust Lower Store Level R1276 for a meter reading of 180 volts.

9. Adjust Upper and Lower Non-Store Levels

a. Set the Sweep MODE to AUTO and the UPPER SCREEN STORE to STORE (button in).

b. Adjust the INTENSITY control for a moderately bright trace.

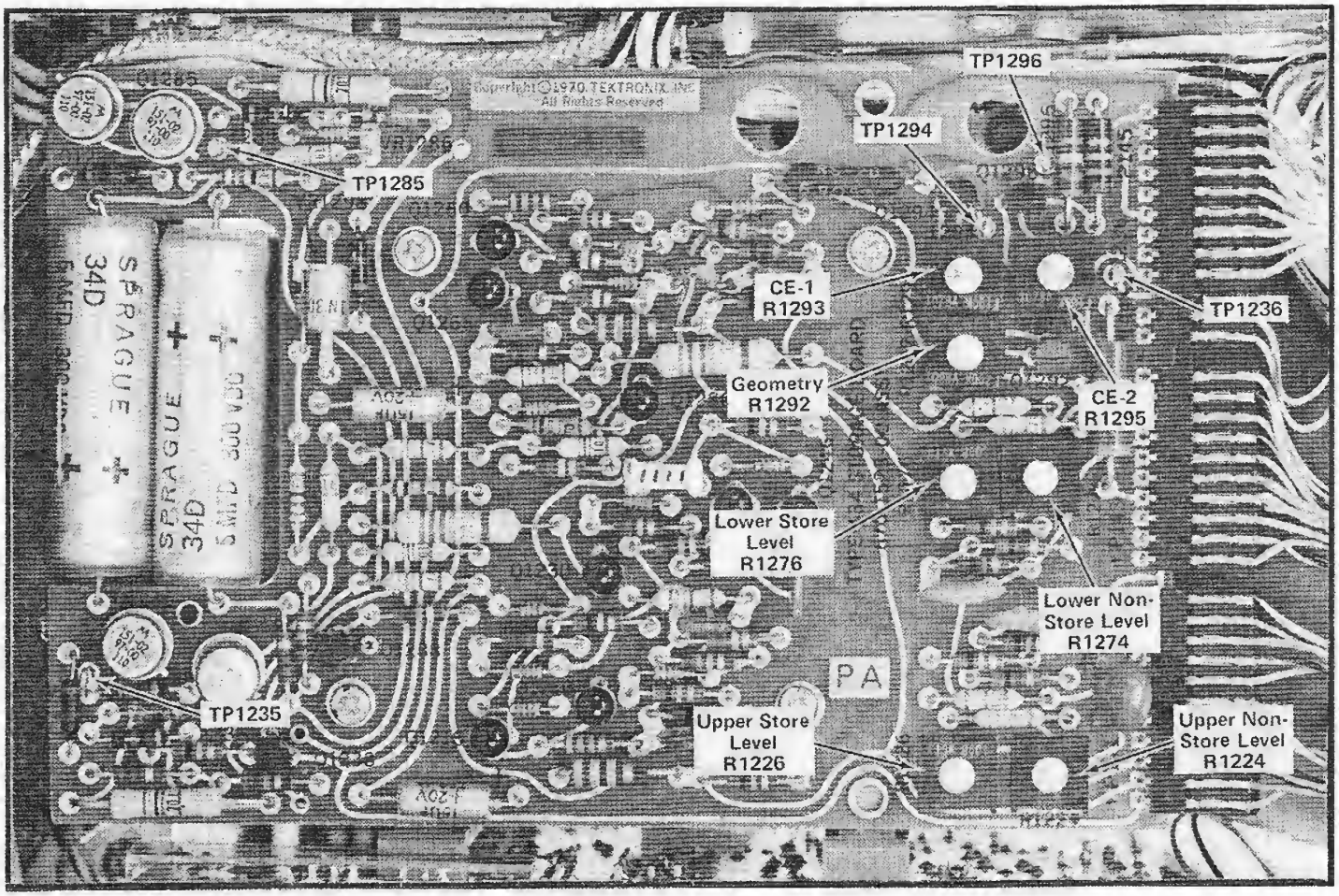

Fig. 5-6. Location of storage circuit adjustments and test points.

c. Fully write the entire screen by vertically positioning the trace from one extreme to the other.

d. Set the LOWER SCREEN STORE button to the non-store (button out) position.

e. CHECK–The stored display in the Lower Screen area disappears very quickly and does not linger. Also should have minimum "scalloping" of the Upper Screen stored display.

f. ADJUST–Lower Screen Non-Store Level R1274 for best non-store display compromise as described in step e.

g. Set the LOWER SCREEN STORE button to STORE (button in).

h. Fully write the entire screen by vertically positioning the trace from one extreme to the other.

i. Set the UPPER SCREEN STORE button to the non-store (button out) position.

j. CHECK–The stored display in the Upper Screen area disappears very quickly and does not linger. Also should have minimum "scalloping" of the Lower Screen stored display.

k. ADJUST–Upper Screen Non-Store Level R1224 for best non-store display compromise as described in step k.

10. Adjust Upper and Lower Store Levels

NOTE

Some compromises in the CRT display can be made by adjusting the Store Level controls. When the operating level is increased, the brightness and writing speed increase; however, the contrast ratio decreases. When the operating level is decreased, the contrast ratio increases; however, brightness and writing speed decreases.

a. Set both STORE buttons to their Non-store (button out) positions and adjust the INTENSITY control for normal display brightness.

b. Adjust the ASTIGMATISM adjustment for a well-defined trace.

c. Set both STORE buttons to their STORE (button in) position, the TRIGGER SOURCE to LINE, the TRIGGER LEVEL to midrange, and the TIME/DIV to 1 ms/div.

d. Connect the plus lead of the DC voltmeter to test point TP1235 (see Fig. 5-6).

e. Locate the writing threshold in the following manner:

1. Vertically position the trace from one extreme of the display area to the other in such a manner so as to achieve approximately three written lines per division.

2. Carefully check the written lines for breaks or gaps of 0.025 inch or more. If no breaks or gaps are evident after 10 seconds, note the voltmeter reading, then adjust Upper Store Level R1226 to decrease the operating level by 5 volts.

3. Erase the display, wait 10 seconds, then write again and check for breaks or gaps.

4. Repeat this procedure of decreasing the operating voltage in 5-volt steps until breaks of approximately 0.025 inch occur. This is the writing threshold. Note this voltage and rotate the Upper Store Level adjustment until the original level in step 2 is reached.

NOTE

Do not change the INTENSITY or ASTIGMATISM control settings.

f. Locate the upper writing limit as follows:

1. Vertically position the trace from one extreme of the display area to the other in such a manner so as to achieve approximately three written lines per division.

2. Carefully check the stored lines for more than normal trace spreading or background fadeup. If no trace spreading or background fadeup is evident after 10 seconds, adjust Upper Store Level R1226 to increase the operating level by 5 volts.

3. Erase the display, wait 10 seconds, then write again and check for breaks or gaps.

4. Repeat this procedure until trace spreading or background fade-up occurs. This is the upper writing limit. Note this voltage.

g. Adjust Upper Store Level R1226 for an operating point midway between the writing threshold and the upper writing limit. Adjust Lower Store Level R1224 to set the lower screen operating level to the same point while measuring the voltage level at test point TP1285. It is desirable to have both storage targets at the same operating level to minimize the difference in background illumination.

h. Disconnect the DC voltmeter.

i. INTERACTION–Collimation is affected if change in operating level is significant.

11. Adjust Collimation

a. Set the Sweep MODE to AUTO, the TRIGGER LEVEL control fully clockwise, and vertically position the free-running trace from one extreme of the display area to the other to write the entire screen.

b. Rotate the INTENSITY control fully counter-clockwise.

c. ADJUST–R1293 (CE-1) throughout its range. Note that as the adjustment is rotated in the clockwise direction, the display grows brighter in the center and then the brightness spreads to the edges of the screen. A further increase in the voltage level at the CE-1 electrode will cause slight shadows to occur and then a large bright area in the center. Normally, the optimum setting for CE-1 is where the full screen is bright but the shadows haven't yet started to occur.

d. ADJUST–R1295 (CE-2) throughout its range. Note that as the voltage level at test point TP1296 is increased, the edges of the display area brighten and then merge with the rest of the display. Normally the optimum setting for CE-2 is where the bright edges have merged and the display area is of uniform brightness.

e. Erase the display and disconnect all test equipment.

f. INTERACTION–May affect operating level if changes in collimation settings are significant.

12. Check Stored Writing Speed

a. Set both STORE buttons to the Non-store (button out) position and the TRIGGER SOURCE to CH 1.

b. Connect the output of a Time-Mark Generator to the CH 1 input connector via a 42-inch 50 Ω BNC cable.

c. Set the Time-Mark Generator for an output of 10 microsecond markers.

d. Adjust the TRIGGER LEVEL control for a stable display.

e. Set the TIME/DIV switch and the TIME/DIV Variable control for one marker per division.

f. Set CH 1 input coupling to GND.

g. Position the trace on screen with the beginning of the trace at the left edge of the graticule.

h. Set the Sweep MODE to SINGLE SWEEP, the TRIGGER SOURCE to LINE, and both STORE buttons to the STORE (button in) position.

i. Adjust the INTENSITY control until the spot is just extinguished.

j. Press both ERASE buttons, wait 10 seconds, and then press the RESET button. A single sweep should be presented and stored.

k. CHECK–CRT stored display for no breaks or gaps exceeding 0.025 inch. Check the entire storage display area. Proper storage of a 10 μs/division sweep indicates a storage writing rate of at least 100 centimeters per millisecond.

l. Erase the display, reduce the setting of the INTENSITY control, and set CH 1 input coupling to DC.

m. Set the Sweep MODE to AUTO, the STORE buttons to Non-Store (button out), and TRIGGER SOURCE to CH 1.

n. Set the TIME/DIV switch and the TIME/DIV Variable control for one marker per four divisions.

o. Set the CH 1 input coupling to GND, Sweep MODE to SINGLE SWEEP, TRIGGER SOURCE to LINE, TRIGGER LEVEL to midrange, STORE buttons to STORE (button in), and ENHANCE buttons On (buttons in).

p. Adjust the INTENSITY control until the spot is just extinguished.

q. Erase the display, wait at least 3 seconds, then push the RESET button. Repeat this procedure while adjusting the ENHANCE LEVEL control to obtain a stored display where the background just starts to fade up.

r. CHECK–CRT stored display for no breaks or gaps exceeding 0.025 inch. Check the entire storage display area. Proper storage of a 2.5 μs/division sweep indicates an enhanced storage writing speed of at least 400 centimeters per millisecond.

s. Set the STORE buttons to Non-store (buttons out), ENHANCE buttons to Off (buttons out), Sweep MODE to AUTO, TRIGGER SOURCE to CH 1, and INTENSITY control for normal display intensity.

13. Adjust Geometry

a. Set the CH 1 input coupling to DC.

b. Apply 1 ms and .1 ms time marks from the Time-Mark Generator to the CH 1 input connector.

c. Adjust the CH 1 POSITION control and the CH 1 VOLTS/DIV switch so the time marks extend above and below the vertical extremes of the CRT viewing area.

d. Adjust the TRIGGER LEVEL control for a stable display with the TIME/DIV switch set to 1 ms.

e. CHECK–CRT display for no more than 0.1 division of bowing or tilt of time marks in the center 6 X 10 division area, and no more than 0.2 division of misalignment in the extreme upper and lower 1 X 10 division areas.

f. ADJUST–Geometry adjustments R967 and R1292 (see Figs 5-5 and 5-6) for minimum bowing and tilt of time marks. Normally, the optimum adjustment point of R1292 is for a voltage measurement of +230 volts at the emitter of transistor Q1292 located on the Storage circuit board.

g. Disconnect all test equipment.

14. Check BEAM FINDER Operation

a. Press the BEAM FINDER button.

b. Rotate the CH 1 POSITION and horizontal POSITION controls fully clockwise and then fully counterclockwise.

c. CHECK–Should not be able to position the free-running trace out of the graticule area when holding the BEAM FINDER button in.

15. Check External Z Axis Operation

a. Connect the output of the Medium-Frequency Constant-Amplitude Signal Generator to the EXT TRIG and Z AXIS input connectors via a 50 Ω termination, a BNC T, and two 42-inch 50 Ω BNC cables.

b. Adjust the Constant–Amplitude Signal Generator for a 5-volt output amplitude of 50 kilohertz reference signal.

c. Set the TIME/DIV switch to 20 μs and the TRIGGER SOURCE to EXT.

d. Adjust the TRIGGER LEVEL control for a stable display.

e. CHECK–CRT display for noticeable intensity modulation of the trace (may require reducing the setting of the INTENSITY control).

f. Increase the output frequency of the Constant Amplitude Signal Generator to 20 megahertz.

g. Set the TIME/DIV switch to .05 μs.

h. CHECK–CRT display for noticeable intensity modulation of the trace.

i. Disconnect all test equipment.

16. Check Chopped Operation

a. Set the TIME/DIV switch to 2 μs and the TRIGGER SOURCE to COMP.

b. Apply 1 μs time marks to the CH 1 input connector.

c. Adjust the TRIGGER LEVEL control for a stable display.

d. Adjust the TIME/DIV switch and the Variable TIME/DIV control for exactly two markers per division.

e. Disconnect the Time-Mark Generator. Do not change the setting of the TIME/DIV switch or the Variable TIME/DIV control.

f. Set the Vertical Mode to CHOP.

g. Adjust the TRIGGER LEVEL control for a stable display.

h. Adjust the CH 1 and CH 2 POSITION controls to separate the two traces.

i. CHECK–Time duration of chopped waveform should be approximately 4.2 to 6.2 divisions (80 kilohertz to 120 kilohertz, approximately).

NOTES

VERTICAL SYSTEM ADJUSTMENT

Equipment Required

1. Standard Amplitude Calibrator
2. Square-Wave Generator
3. Medium-Frequency Constant-Amplitude Signal Generator
4. 24 pF Input Normalizer
5. 42-Inch 50 Ω BNC Cable (2 required)
6. BNC 50 Ω 10X Attenuator
7. Adapter (GR874 and BNC female connectors)
8. 50 Ω BNC Termination
9. BNC T Connector
10. 3-Inch Screwdriver
11. Low-Capacitance Screwdriver
12. Tuning Tool

Control Settings

Preset the instrument controls to the settings given under Preliminary Control Settings except as follows:

Sweep MODE	AUTO
INTENSITY	For visible display
Input Coupling	GND
TRIGGER LEVEL	Fully clockwise

17. Adjust Channel 1 Balance

a. Change the CH 1 VOLTS/DIV switch from 10 mV to 1 mV.

b. CHECK—CRT display for not more than 0.1 division of trace shift when switching from 10 mV to 1 mV.

c. ADJUST—CH 1 STEP ATTEN BAL adjustment (located on front panel) for minimum trace shift when switching from 10 mV to 1 mV.

d. Set the CH 1 VOLTS/DIV switch to 10 mV.

e. Rotate the CH 1 Variable VOLTS/DIV control.

f. CHECK—CRT display for not more than 0.2 division of trace shift when rotating the CH 1 Variable VOLTS/DIV control.

g. ADJUST—Variable Balance adjust R212 (see Fig. 5-7) for minimum trace shift when rotating the CH 1 Variable VOLTS/DIV control.

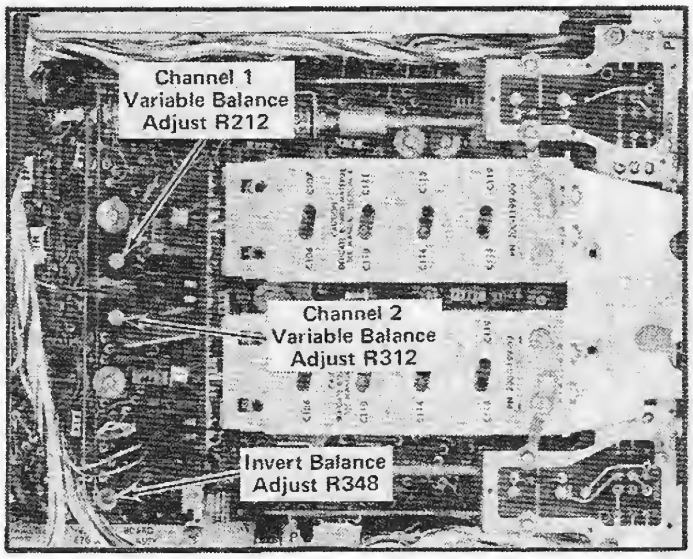

Fig. 5-7. Location of Channel 1 and 2 balance adjustments.

h. Set the CH 1 VOLTS/DIV switch to 10 mV and the CH 1 Variable VOLTS/DIV control to CAL.

18. Adjust Channel 2 Balance

a. Set the Vertical Mode to CH 2.

b. Change the CH 2 VOLTS/DIV switch from 10 mV to 1 mV.

c. CHECK—CRT display for not more than 0.1 division of trace shift when switching from 10 mV to 1 mV.

d. ADJUST—CH 2 STEP ATTEN BAL adjustment (located on front panel) for minimum trace shift when switching from 10 mV to 1 mV.

e. Set the CH 2 VOLTS/DIV switch to 10 mV.

f. Rotate the CH 2 Variable VOLTS/DIV control.

g. CHECK–CRT display for not more than 0.2 division of trace shift when rotating the CH 2 Variable VOLTS/DIV control.

h. ADJUST–Variable Balance adjust R312 (see Fig. 5-7) for minimum trace shift when rotating the CH 2 Variable VOLTS/DIV control.

i. Set the CH 2 VOLTS/DIV switch to 10 mV and the CH 2 Variable VOLTS/DIV control to CAL.

j. Position the free-running trace to the center horizontal graticule line.

k. Set the INVERT switch to the INVERT position (button out).

l. CHECK–CRT display for not more than 0.2 division of trace shift when inverting the Channel 2 display.

m. ADJUST–Invert Balance adjustment R348 (see Fig. 5-7) for minimum trace shift when inverting the Channel 2 display.

n. Push the INVERT button in.

19. Adjust CH 1 and CH 2 GAIN

a. Set input coupling for both channels to DC.

b. Connect the output of the Standard Amplitude Calibrator to the CH 2 input connector via a 42-inch BNC cable.

c. Set the Standard Amplitude Calibrator for a 50 millivolt signal output amplitude.

d. CHECK–CRT display for 5 divisions, ±0.15 division of deflection.

e. ADJUST–CH 2 GAIN adjustment (located on front panel) for exactly 5 divisions of deflection.

f. Change Vertical Mode to CH 1.

g. Remove the Standard Amplitude Calibrator signal from the CH 2 input connector and connect it to the CH 1 input connector.

h. CHECK–CRT display for 5 divisions, ±0.15 division of deflection.

i. ADJUST–CH 1 GAIN adjustment (located on front panel) for exactly 5 divisions of deflection.

20. Check CH 1 Variable VOLTS/DIV Range and Attenuator Accuracy

a. With exactly a 5-division amplitude display, rotate the CH 1 Variable VOLTS/DIV control.

b. CHECK–CRT display can be reduced in amplitude to two divisions or less.

c. Set the CH 1 Variable VOLTS/DIV control to CAL.

d. CHECK–Using the CH 1 VOLTS/DIV switch and the Standard Amplitude Calibrator settings given in Table 5-1, check to see if the vertical deflection factor accuracy for each position of the CH 1 VOLTS/DIV switch is within 3%.

TABLE 5-1

Vertical Deflection Accuracy

VOLTS/DIV Switch Setting	Standard Amplitude Calibrator Output	Vertical Deflection in Divisions	Maximum Error For ±3% Accuracy
1 mV	5 millivolts	5	±0.15 division
2 mV	10 millivolts	5	±0.15 division
5 mV	20 millivolts	4	±0.12 division
10 mV	50 millivolts	5	Previously set in step 19.
20 mV	0.1 volt	5	±0.15 division
50 mV	0.2 volt	4	±0.12 division
.1 V	0.5 volt	5	±0.15 division
.2 V	1 volt	5	±0.15 division
.5 V	2 volts	4	±0.12 division
1 V	5 volts	5	±0.15 division
2 V	10 volts	5	±0.15 division
5 V	20 volts	4	±0.12 division
10 V	50 volts	5	±0.15 division

21. Check CH 2 Variable VOLTS/DIV Range and Attenuator Accuracy

a. Remove the Standard Amplitude Calibrator signal from the CH 1 input connector and connect it to the CH 2 input connector and set the Vertical Mode to CH 2.

b. With the CH 2 VOLTS/DIV switch set to 10 mV, set the Standard Amplitude Calibrator for a 50 millivolt output signal amplitude.

c. With an exactly 5-division amplitude display, rotate the CH 2 Variable VOLTS/DIV control.

d. CHECK—CRT display can be reduced in amplitude to two divisions or less.

e. Set the CH 2 Variable VOLTS/DIV control to CAL.

f. CHECK—Using the CH 2 VOLTS/DIV switch and the Standard Amplitude Calibrator settings given in Table 5-1, check to see if the vertical deflection factor accuracy for each position of the CH 2 VOLTS/DIV switch is within 3%.

22. Check ADD Mode Operation

a. Apply the Standard Amplitude Calibrator output signal to both the CH 1 and CH 2 input connectors via a BNC T and two 42-inch 50 Ω BNC cables.

b. Set both VOLTS/DIV switches to .1 V and the Vertical Mode to ADD.

c. Set the Standard Amplitude Calibrator for a .2 volt output signal.

d. CHECK—CRT display for 4 divisions, ±0.12 division of deflection.

e. Disconnect all test equipment.

23. Adjust Channel 1 VOLTS/DIV Switch Compensation

a. Set the Channel 1 VOLTS/DIV switch to 10 mV, the Vertical Mode to CH 1, and the CH 1 Input Coupling to DC.

b. Connect the high-amplitude output of the Square-Wave Generator (Type 106) to the CH 1 input connector via a GR to BNC adapter, a 42-inch 50 Ω BNC cable, a 50 Ω BNC 10X attenuator, a 50 Ω BNC termination, and a 24 picofarad input normalizer.

c. Adjust the output of the Square-Wave Generator for a display five divisions in amplitude and a repetition rate of one kilohertz.

d. Adjust the TRIGGER LEVEL control for a stable display.

e. CHECK—CRT display at each Channel 1 VOLTS/DIV switch position for optimum square corner and flat top. Typically less than +2%, −2%, or a total of 2% peak to peak aberration (+3%, −3%, or total of 3% peak to peak if the measurement is being made outside of the +20°C to +30°C temperature range). Remove the 10X attenuator and the 50 Ω BNC termination as necessary to maintain a five-division display amplitude.

f. ADJUST—Channel 1 VOLTS/DIV switch compensation as given in Table 5-2. Adjust for optimum square corner and flat top. Remove the 10X attenuator and 50 Ω BNC termination as necessary to maintain a five-division display amplitude. Fig. 5-8 shows the location of the variable compensation adjustments.

TABLE 5-2

VOLTS/DIV Switch Compensation

VOLTS/DIV Switch Setting	Attenuator Compensated	Adjusted for optimum Square Corner	Adjusted for optimum Flat Top
10 mV	÷1		C9 for Channel 1 C19 for Channel 2
5 mV	Check	If error is greater than 2%, compromise setting at 1 mV, 2 mV, 5 mV, and 10 mV for best overall response.	
2 mV	Check		
1 mV	Check		
20 mV	÷2	C106	C107
50 mV	÷5	C110	C111
.1 V	÷10	C114	C115
Remove external 10X attenuator from generator			
.2 V	Check	If error is greater than 2%, compromise setting at .1 V, .2 V, and .5 V for best overall response.	
.5 V	Check		
Remove 50 Ω termination			
1 V	÷100	C118	C119
2 V	Check	If error is greater than 2%, compromise setting at 1 V, 2 V, 5 V, and 10 V for best overall response.	
5 V	Check		
10 V	Check		

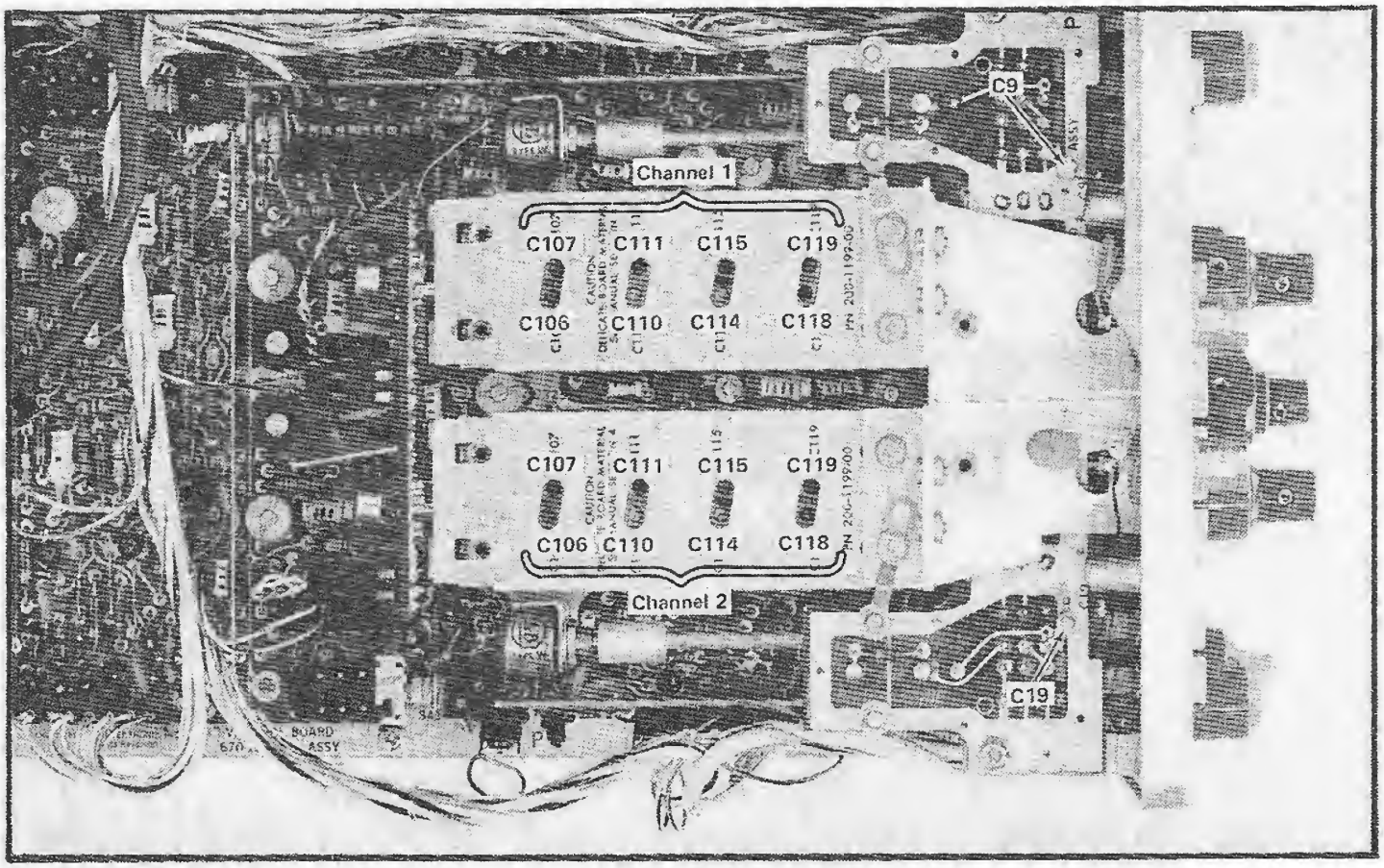

Fig. 5-8. Location of CH 1 & CH 2 VOLTS/DIV switch compensation adjustments.

24. Adjust Channel 2 VOLTS/DIV Switch Compensation

a. Set the Channel 2 VOLTS/DIV switch to 10 mV, the Vertical Mode to CH 2, and the CH 2 Input Coupling to DC.

b. Connect the high-amplitude output of the Square-Wave Generator (Type 106) to the CH 2 input connector via a GR to BNC adapter, a 42-inch 50 Ω BNC cable, a 50 Ω BNC 10X attenuator, a 50 Ω BNC termination, and a 24 picofarad input normalizer.

c. Adjust the output of the Square-Wave Generator for a display five divisions in amplitude and a repetition rate of one kilohertz.

d. CHECK—CRT display at each Channel 2 VOLTS/DIV switch position for optimum square corner and flat top. Typically less than +2%, −2%, total of 2% peak to peak aberration (+3%, −3%, total of 3% peak to peak if the measurement is being made outside of the +20°C to +30°C temperature range). Remove the 10X attenuator and the 50 Ω BNC termination as necessary to maintain a five division display amplitude.

e. ADJUST—Channel 2 VOLTS/DIV switch compensation as given in Table 5-2. Adjust for optimum square corner and flat top. Remove the 10X attenuator and 50 Ω BNC termination as necessary to maintain a five-division display amplitude. Fig. 5-8 shows the location of the variable compensation adjustments.

f. Disconnect all test equipment.

25. Adjust High Frequency Compensation

a. Connect the positive-going fast-rise output of the Square-Wave Generator (Type 106) to the CH 1 input connector via a GR to BNC adapter, a 42-inch 50 Ω BNC cable, and a 50 Ω BNC termination.

b. Set the Vertical Mode to CH 1 and both VOLTS/DIV switches to 10 mV.

c. Set the Square-Wave Generator for a six-division display with a repetition rate of 100 kilohertz.

d. Adjust the TRIGGER LEVEL control for a stable display.

e. Vertically center the display in the CRT viewing area with the CH 1 POSITION control.

f. CHECK–CRT display for optimum risetime with aberrations typically less than +2%, –2%, a total of 2% peak to peak (+3%, –3%, total of 3% peak to peak if this measurement is being made outside of the +20°C to +30°C temperature range).

g. ADJUST–C217, C226, C461, R461, C572, L533, and L584 (see Fig. 5-9) for optimum risetime and aberrations typically less than +2%, –2%, or a total of 2% peak to peak (+3%, –3%, a total of 3% peak to peak if this measurement is being made outside of the +20°C to +30°C temperature range).

h. Position the top of the display to the bottom graticule line.

i. CHECK–CRT display for aberrations typically less then +4%, –4%, or a total of 6% peak to peak.

NOTE

The tolerances given in steps i, o, t, and w apply only in the temperature range of +20°C to +30°C.

j. Remove the Square-Wave Generator signal from the CH 1 input connector and connect it to the CH 2 input connector.

k. Set Vertical Mode to CH 2 and vertically center the display with the CH 2 POSITION control.

l. CHECK–CRT display for optimum risetime with aberrations typically less than +2%, –2%, or a total of 2% peak to peak (+3%, –3%, or a total of 3% peak to peak if this measurement is being made outside of the +20°C to +30°C temperature range).

m. ADJUST–C317 and C326 (see Fig. 5-9) for optimum risetime with aberrations typically less than +2%, –2%, or a total of 2% peak to peak (+3%, –3%, or a total of 3% peak to peak if this measurement is being made outside of the +20°C to +30°C temperature range).

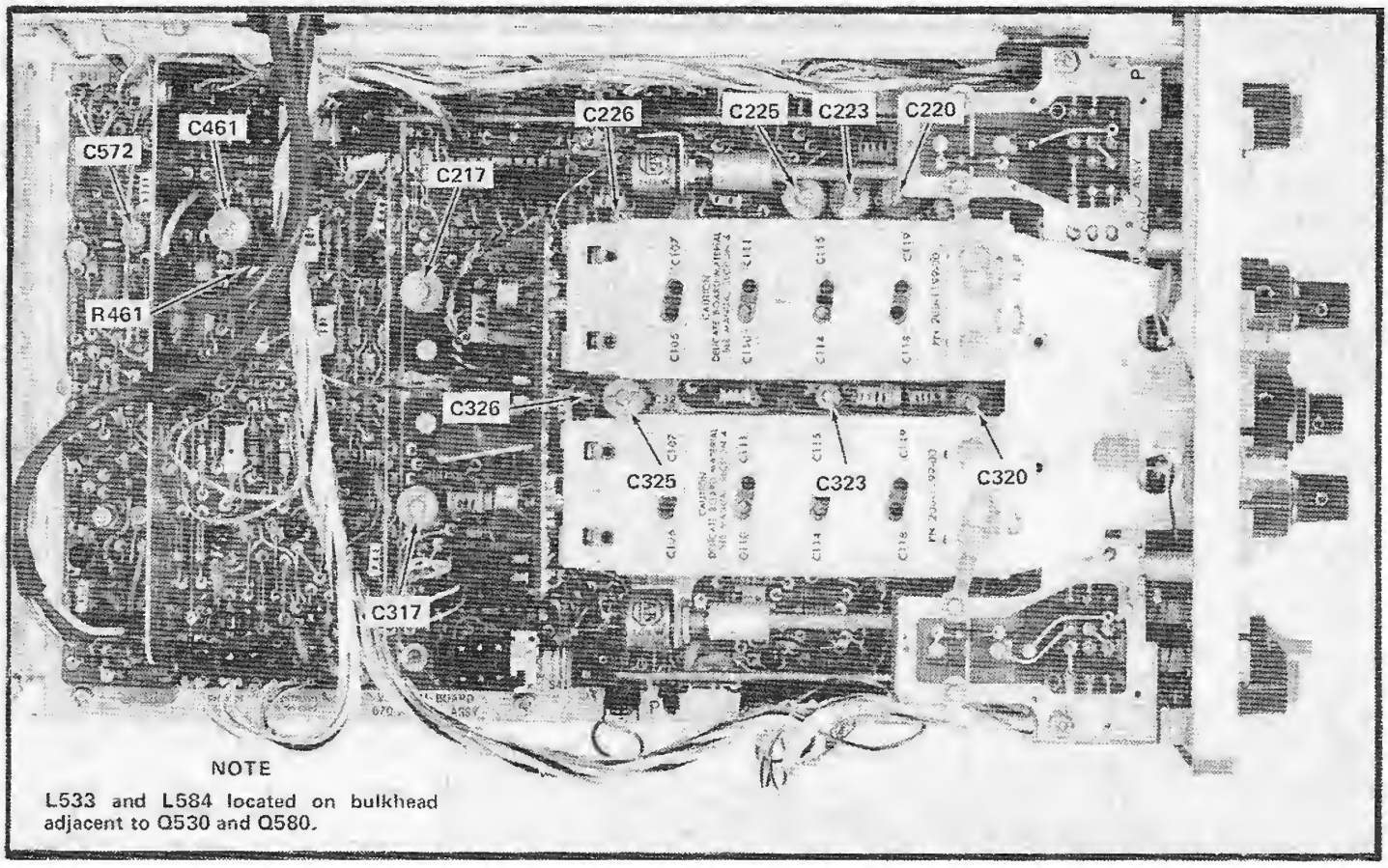

Fig. 5-9. Location of vertical system high-frequency compensation adjustments.

n. Position the top of the display to the bottom graticule line.

o. CHECK–CRT display for aberrations typically less than +4%, –4%, or a total of 6% peak to peak.

p. Connect the negative-going fast-rise output of the Square-Wave Generator to the CH 2 input connector.

q. Adjust the Square-Wave Generator for a six division display.

r. Set TRIGGER SLOPE to – and obtain a stable display.

s. Position the bottom of the display to the top of the graticule.

t. CHECK–CRT display for aberrations typically less then +4%, –4%, or a total of 6% peak to peak.

u. Remove the Square-Wave Generator signal from the CH 2 input connector and connect it to the CH 1 input connector.

v. Set the Vertical Mode to CH 1 and position the bottom of the display to the top of the graticule.

w. CHECK–CRT display for aberrations typically less than +4%, –4%, or a total of 6% peak to peak.

x. Reconnect the positive-going fast-rise output from the Square-Wave Generator to the CH 1 input connector and set the TRIGGER SLOPE switch to +.

y. Set the CH 1 VOLTS/DIV switch to 5 mV.

z. Adjust the Square-Wave Generator for a six-division display.

aa. Vertically center the display using the CH 1 POSITION control.

ab. CHECK–CRT display in 1 mV, 2 mV, and 5 mV positions of the CH 1 and CH 2 VOLTS/DIV switches. Refer to Table 5-3. Use the 10X BNC attenuator as necessary to maintain a six-division display amplitude.

TABLE 5-3

Amplifier Compensation

VOLTS/DIV Switch Setting	Compensation Adjustment	Typical Aberration
5 mV	C225 in Channel 1 C325 in Channel 2	Less than +2%, –2%, total of 2% peak to peak.
2 mV	C223 in Channel 1 C323 in Channel 2	
1 mV	C220 in Channel 1 C320 in Channel 2	Less than +3%, –3%, total of 3% peak to peak.

ac. ADJUST–Refer to Table 5-3 for the correct adjustment and tolerances. See Fig. 5-9 for adjustment locations.

ad. Disconnect all test equipment.

26. Check Vertical Amplifier Bandwidth

a. Connect the output of the Medium-Frequency Constant-Amplitude Signal Generator to the CH 1 input connector via a GR to BNC adapter, a 42-inch 50 Ω BNC cable, a 10X BNC attenuator, and a 50 Ω BNC termination.

b. Set both VOLTS/DIV switches to 10 mV, the Vertical Mode to CH 1, and the TRIGGER LEVEL control fully clockwise.

c. Adjust the signal generator output amplitude for a six-division display of the 50 kilohertz reference frequency.

d. Without changing the output amplitude, increase the output frequency until the display is reduced to 4.2 divisions.

e. CHECK–Output frequency of the signal generator must be at least 25 megahertz.

f. Repeat this bandwidth check procedure for all positions listed in Table 5-4. Check both Channel 1 and Channel 2.

TABLE 5-4

Vertical Amplifier Bandwidth

VOLTS/DIV Switch Setting	Minimum Bandwidth	
	–15°C to +30°C	+30°C to +55°C
10 mV	25 megahertz	25 megahertz
5 mV	23 megahertz	21 megahertz
2 mV	20 megahertz	18 megahertz
1 mV	18 megahertz	16 megahertz

27. Check 5 MHz BW Bandwidth

a. Connect the output of the Medium-Frequency Constant-Amplitude Signal Generator to the CH 1 input connector via a GR to BNC adapter, a 42-inch 50 Ω BNC cable, and a 50 Ω BNC termination.

b. Set the CH 1 VOLTS/DIV switch to 10 mV and the Vertical Mode to CH 1.

c. Set the 5 MHz BW button to the out position.

d. Adjust the output of the signal generator for a six-division display of the 50 kilohertz reference frequency.

e. Without changing the output amplitude, increase the frequency of the signal generator until the display is reduced to 4.2 divisions.

f. CHECK–Output frequency of the generator must be 5 megahertz, ±1 megahertz.

g. Disconnect all test equipment.

NOTES

TRIGGER CIRCUIT ADJUSTMENT

Equipment Required

1. Medium-Frequency Constant-Amplitude Signal Generator
2. Low-Frequency Signal Generator
3. 50 Ω BNC Termination
4. BNC T Connector
5. 42-Inch 50 Ω BNC Cable (two required)
6. 3-Inch Screwdriver

Control Settings

Preset the instrument controls to the settings given under Preliminary Control Settings except as follows:

Sweep MODE	AUTO
TIME/DIV	50 μs
INTENSITY	Visible Display

28. Adjust Trigger Level Centering

a. Connect the output of the Medium-Frequency Constant-Amplitude Signal Generator to the CH 1 input connector via a GR to BNC adapter, a 42-inch 50 Ω BNC cable, and a 50 Ω BNC termination.

b. Adjust the output of the signal generator for a 0.3-division display of the 50 kilohertz reference frequency.

c. Vertically center the display around the center graticule line.

d. CHECK—With the TRIGGER LEVEL control centered, should have a stable display in the + and — positions of the TRIGGER SLOPE switch.

e. ADJUST—Trigger Level Centering adjustment R629 (see Fig. 5-10) for a stable display in both the + and — positions of the TRIGGER SLOPE switch.

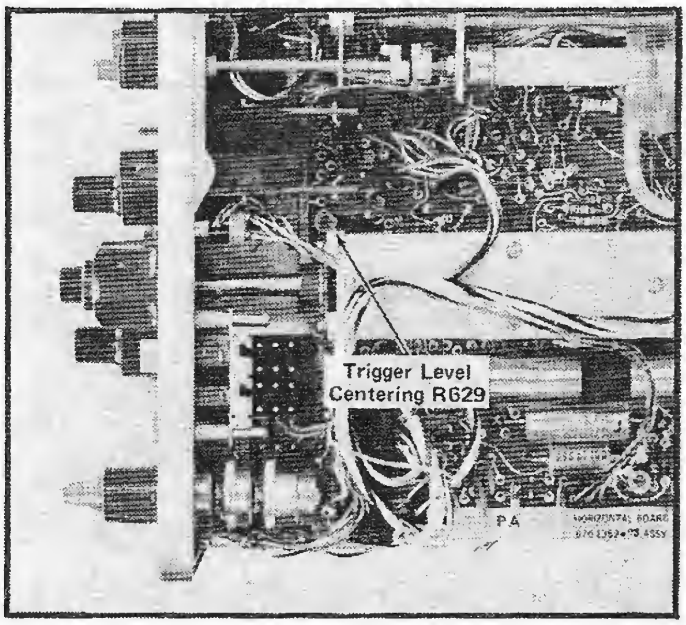

Fig. 5-10. Location of Trigger Level Centering adjustment.

29. Adjust CH 1 and COMP Trigger DC Level

a. Set the TRIGGER COUPLING to DC and the TRIGGER SLOPE switch to +.

b. CHECK—CRT for a stable display.

c. ADJUST—Comp Trigger DC Level adjustment R274 (see Fig. 5-11) for a stable display.

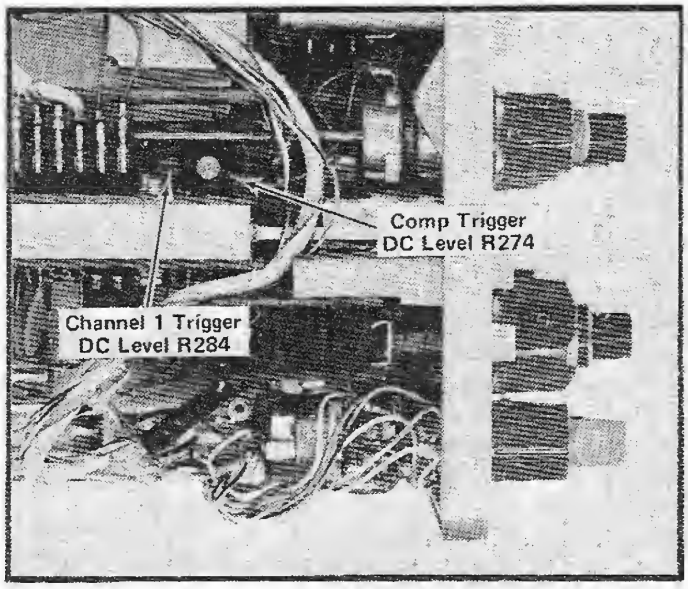

Fig. 5-11. Location of trigger DC level adjustments.

d. Set the TRIGGER SOURCE to CH 1.

e. CHECK–CRT for a stable display.

f. ADJUST–CH 1 Trigger DC Level adjustment R284 (see Fig. 5-11) for a stable display.

30. Check Trigger Circuit Operation

a. Connect the signal from the signal generator to the CH 1 input connector via a GR to BNC adapter, a 42-inch 50 Ω BNC cable, and a BNC T connector. Connect the unused output of the BNC T connector to the EXT TRIG input connector via a 42-inch 50 Ω BNC cable and a 50 Ω BNC termination.

b. CHECK–Stable display can be obtained using the signal amplitude and coupling modes given in Table 5-5.

TABLE 5-5

Trigger Operation Check

TRIGGER SOURCE	TRIGGER COUPLING	Minimum Signal Amplitude	
		5 MHz	25 MHz
CH 1 & COMP	AC DC LF REJ	0.3 div	1 div
EXT	AC DC LF REJ	35 mV	125 mV

c. Set TRIGGER SOURCE to COMP and TRIGGER COUPLING to HF REJ.

d. Adjust the signal generator output for a one-division display of the 50 kilohertz reference frequency.

e. CHECK–A stable display can be obtained.

f. Adjust the signal generator output for a one-division display of a 1 megahertz signal.

g. CHECK–A stable display can not be obtained.

h. Replace the Medium-Frequency Constant-Amplitude Signal Generator with a Low-Frequency Signal Generator and remove the 50 Ω BNC termination from the test setup (42-inch 50 Ω BNC cable should be connected directly to the EXT TRIG input connector).

i. Set the TRIGGER COUPLING to LF REJ.

j. Adjust the Low-Frequency Signal Generator for a one-division display of a 30 kilohertz signal.

k. CHECK–A stable display can be obtained.

l. Adjust the signal generator for a one-division display of a 100 hertz signal.

m. CHECK–A stable display can not be obtained.

n. Adjust the signal generator for a one-division display of a 100 kilohertz signal.

o. Set Sweep MODE to NORM.

p. CHECK–Should be able to obtain a stable display. When the TRIGGER LEVEL control is rotated fully counterclockwise or clockwise, there should be no display presented on the CRT.

31. Check Single Sweep Operation

a. Adjust the signal generator for a 0.3-division display of a 1 kilohertz signal.

b. Set the TRIGGER COUPLING to AC.

c. Adjust the TRIGGER LEVEL control for a stable display.

d. Set the Sweep MODE to SINGLE SWEEP.

e. Press the RESET button.

f. CHECK–A single-sweep display (one sweep only) is presented.

g. Rotate the TRIGGER LEVEL control fully clockwise.

h. Press the RESET button.

i. CHECK–The READY light comes on and remains on until the sweep is triggered.

j. Rotate the TRIGGER LEVEL control through midrange.

k. CHECK–A single-sweep display (one sweep only) is presented and the READY light goes out.

32. Check TRIGGER LEVEL Control Range

a. Set the Sweep MODE to AUTO, TRIGGER COUPLING to DC, TRIGGER SOURCE to EXT, and the CH 1 VOLTS/DIV switch to 1 V.

b. Adjust the signal generator for a 4-division display of a 1 kilohertz signal.

c. CHECK–Rotate the TRIGGER LEVEL control throughout its range and check that the display can be triggered (stable display) at any point along the slope of the waveform in both the + and – positions of the TRIGGER SLOPE switch. This indicates a control range of at least +2 volts to –2 volts.

d. Set the EXT ATTEN pushbutton to 1:10 and the CH 1 VOLTS/DIV switch to 10 V.

e. Adjust the signal generator for a 4-division display of a 1 kilohertz signal.

f. CHECK–Rotate the TRIGGER LEVEL control throughout its range and check that the display can be triggered (stable display) at any point along the slope of the waveform in both the + and – positions of the TRIGGER SLOPE switch. This indicates a control range of at least +20 volts to –20 volts.

g. Disconnect all test equipment.

33. Check Line Triggering

a. Connect a 10X probe (432 standard accessory) to the CH 1 input connector.

b. Set the TRIGGER SOURCE to LINE, the TRIGGER COUPLING to AC, and the CH 1 VOLTS/DIV switch to 10 V.

c. Connect the probe tip to the same line-voltage souce which is connected to the instrument.

d. Adjust the TRIGGER LEVEL control for a stable display.

e. CHECK–Stable CRT display triggered on the correct slope in both the + and – positions of the TRIGGER SLOPE switch.

f. Disconnect all test equipment.

NOTES

HORIZONTAL SYSTEM CALIBRATION

Equipment Required

1. Test Oscilloscope
2. Time-Mark Generator
3. Standard Amplitude Calibrator
4. 42-Inch 50 Ω BNC Cable
5. 3-Inch Screwdriver
6. Low-Capacitance Screwdriver

Control Settings

Preset instrument controls to the settings given under Preliminary Control Settings except as follows:

Sweep MODE	AUTO
INTENSITY	Visible Display

34. Adjust Sweep Generator Offset Adjustment

a. Connect a 1X probe to the test oscilloscope vertical input.

b. Connect the tip of the 1X probe to TP701 (see Fig. 5-12).

c. Set the test oscilloscope input coupling to ground and establish a 0 V DC reference level.

d. Set the test oscilloscope input coupling to DC and the Volts/Div to 5 mV.

e. CHECK–Test oscilloscope display is within two divisions of the 0 V DC reference level.

f. ADJUST–Sweep Generator Offset adjustment R703 (see Fig. 5-12) to center the test oscilloscope display around the 0 V DC reference level.

g. Disconnect all test equipment.

35. Adjust Sweep Cal Adjustment

a. Connect a Time-Mark Generator to the CH 1 input connector via a 42-inch 50 Ω BNC cable.

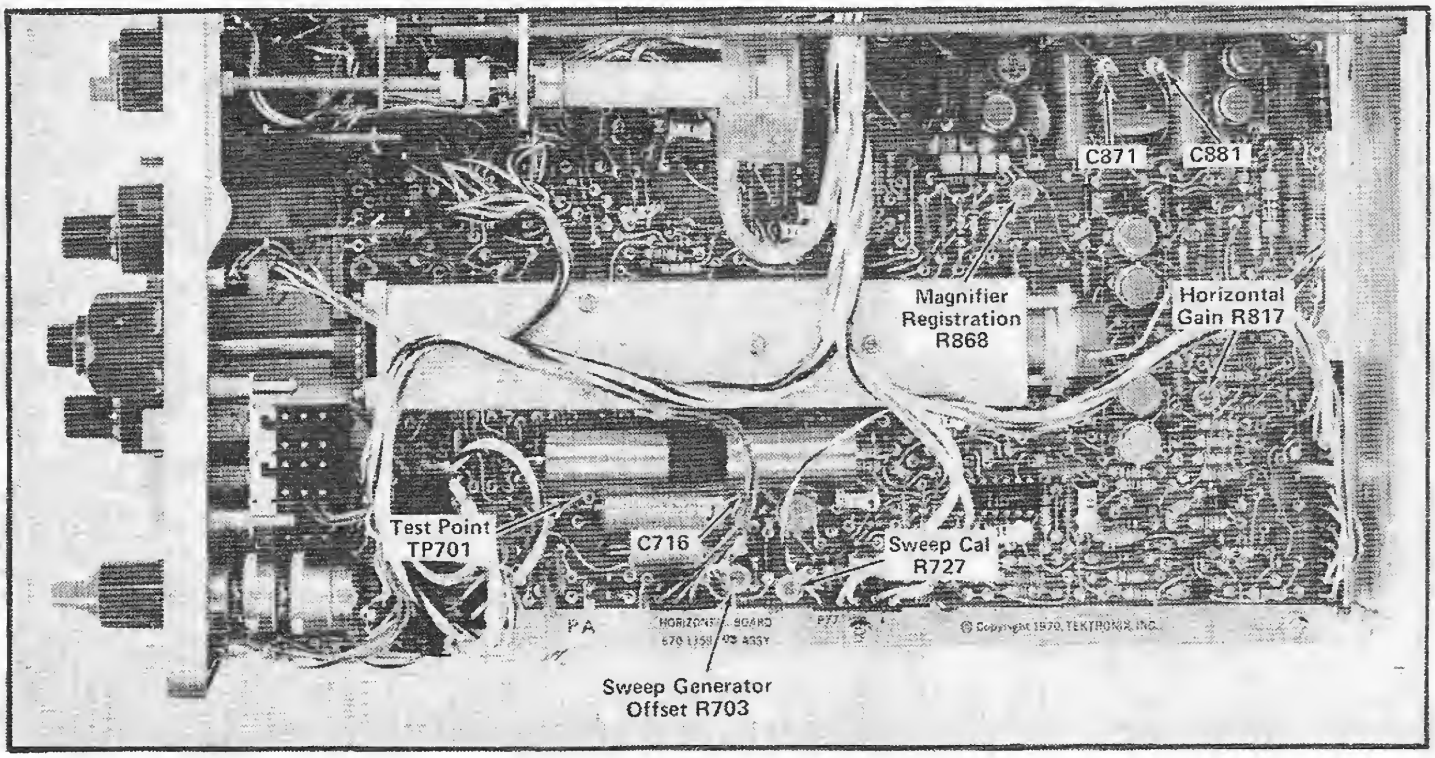

Fig. 5-12. Location of horizontal system adjustments and test points.

NOTE

If the Tektronix Type 184 Time-Mark Generator is used, attach the signal to the CH 1 input connector via a 42-inch 50 Ω BNC cable and a 50 Ω BNC termination.

b. Set the Sweep MODE to NORM.

c. Set the Time-Mark Generator for 1 ms and .1 ms time marks.

d. Set the CH 1 VOLTS/DIV switch to .5 V and adjust the TRIGGER LEVEL control for a stable display.

e. CHECK–CRT display for a sweep duration of approximately 11 ms (indicated by 12 one millisecond time marks).

f. ADJUST–Sweep Cal adjustment R727 (see Fig. 5-12) for a sweep duration of 11 milliseconds.

36. Adjust Horizontal Gain

a. Horizontally position the display to align the first time mark with the left hand edge of the CRT graticule.

b. CHECK–Eleventh time mark should align with the right hand edge of the CRT graticule within 0.3 division (0.4 division if this measurement is being made outside the +20°C to +30°C temperature range).

c. ADJUST–Horizontal Gain adjustment R817 (see Fig. 5-12) for one one-millisecond time mark per division.

37. Adjust Magnifier Registration

a. Set the Time-Mark Generator for 5 ms time marks.

b. With the TIME/DIV switch set to 1 ms, set the MAG switch to 20 μs (50X magnification).

c. Horizontally position the middle time mark to the center vertical graticule line.

d. Set the MAG switch to 1 ms (1X magnification).

e. CHECK–Middle time mark should remain aligned with the center vertical graticule line within approximately one division.

f. ADJUST–Magnifier Registration adjustment R868 (see Fig. 5-12) to align the middle time mark with the center vertical graticule line.

g. Repeat steps b through f until the middle time mark remains aligned with the center vertical graticule line.

38. Check Variable TIME/DIV Range

a. Set the Time-Mark Generator for 10 ms time marks.

b. Rotate the Variable TIME/DIV control through its range of adjustment and set for minimum spacing between time marks.

c. CHECK–CRT display for four or less divisions between time marks when Variable TIME/DIV control is set to minimum. This indicates a Variable range of adjustment of at least 2.5:1.

39. Adjust High Speed Timing

a. Set the TIME/DIV switch to .2 μs.

b. Set the Time-Mark Generator for .1 μs time marks.

c. CHECK–CRT display for two time marks per division within 0.3 division (0.4 division if this measurement is being made outside of the +20°C to +30°C temperature range).

d. ADJUST–C716 (see Fig. 5-12) for two time marks per division.

e. With the TIME/DIV switch set to .2 μs, set the MAG switch to .02 μs.

f. Set the Time-Mark Generator for 10 nanosecond sine wave (20 nanosecond sine wave if using a Type 184).

g. CHECK–CRT display for two cycles per division (one cycle per division if using a 20 nanosecond sine wave) within 0.4 division (0.5 division if this measurement is being made outside of the +20°C to +30°C temperature range). Exclude the first and last two divisions of the magnified sweep.

h. ADJUST–C871 and C881 (see Fig. 5-12) for best timing and linearity excluding the first and last two divisions of the magnified sweep.

i. Set the TIME/DIV switch to 1 μs and the MAG switch to .02 μs. Set the VOLTS/DIV switch to 2 mV/DIV.

j. CHECK–CRT display for two cycles per division (one cycle per division if using a 20 nanosecond sine wave) within 0.4 division (0.5 division if this measurement is being made outside of the +20°C to +30°C temperature range). Exclude the first and last ten divisions of magnified sweep.

k. ADJUST–C871 and C881 (see Fig. 5-12) as necessary for the best compromise of timing and linearity between 1 μs with 50X magnification and .2 μs with 10X magnification.

40. Check TIME/DIV Accuracy

a. CHECK–Apply the appropriate time marks and check each position of the TIME/DIV switch for proper timing (unmagnified) over the first ten divisions of sweep within 0.3 division (0.4 division if this measurement is being made outside of the +20°C to +30°C temperature range).

41. Check Magnified Sweep Accuracy

a. Set the TIME/DIV switch to 1 ms.

b. CHECK–Apply the appropriate time marks and check magnified timing at .5 ms, .2 ms, .1 ms, 50 μs, and 20 μs within 0.4 division (0.5 division if this measurement is being made outside of the +20°C to +30°C temperature range).

c. Set the TIME/DIV switch to .5 ms.

d. CHECK–Apply the appropriate time marks and check magnified timing at .2 ms and 20 μs within 0.4 division (0.5 division if this measurement is being made outside of the +20°C to +30°C temperature range).

e. Set the TIME/DIV switch to .2 ms.

f. CHECK–Apply the appropriate time marks and check magnified timing at 50 μs and 5 μs within 0.4 division (0.5 division if this measurement is being made outside of the +20°C to +30°C temperature range).

42. Check High Speed Magnified Timing Accuracy

a. CHECK–Timing accuracy of TIME/DIV and MAG switch combinations given in Table 5-6 within 0.4 division (0.5 division if this measurement is being made outside of the +20°C to +30°C temperature range).

TABLE 5-6

High Speed Magnified Timing Accuracy

TIME/DIV	MAG	Portions Excluded
1 μs	.5 μs	First and last .5 division.
	.2 μs	First and last 1 division.
	.1 μs	First and last 2 divisions.
	.05 μs	First and last 5 divisions.
	.02 μs	First and last 10 divisions.
.5 μs	.2 μs	First and last .5 division.
	.1 μs	First and last 1 division.
	.05 μs	First and last 2 divisions.
	.02 μs	First and last 5 divisions.
.2 μs	.1 μs	First and last .5 division.
	.05 μs	First and last 1 division.
	.02 μs	First and last 2 divisions.

b. Disconnect all test equipment.

43. Check External Horizontal Sensitivity

a. Set the TIME/DIV switch to EXT HORIZ and the TRIGGER LEVEL control fully clockwise.

b. Connect the output of the Standard Amplitude Calibrator to the EXT HORIZ input connector via a 42-inch 50 Ω BNC cable.

c. Set the Standard Amplitude Calibrator for a two-volt output signal amplitude.

d. CHECK–CRT display for two dots horizontally separated by approximately four divisions (typically within 3.5 to 4.5 divisions).

e. Disconnect all test equipment.

CALIBRATOR CIRCUIT ADJUSTMENT

Equipment Required

1. Precision DC Voltmeter
2. Time-Mark Generator
3. 42-Inch 50 Ω BNC Cable
4. 3-Inch Screwdriver

Control Settings

Preset the Instrument controls to the settings given under Preliminary Control Settings except as follows:

Sweep MODE	AUTO
INTENSITY	Visible Display
Vertical Mode	ALT

44. Adjust Calibrator Output Voltage Amplitude

a. Remove Q905 from its socket (see Fig. 5-13).

b. Connect the Precision DC Voltmeter between the PROBE CAL 0.6 V 1 kHz connector and ground.

c. CHECK–DC voltage measurement of 0.6 volt within 0.003 volt (0.009 volt if this measurement is being made outside of the +20°C to +30°C temperature range).

d. ADJUST–R915 (see Fig. 5-13) for a DC voltage measurement of 0.6 volt.

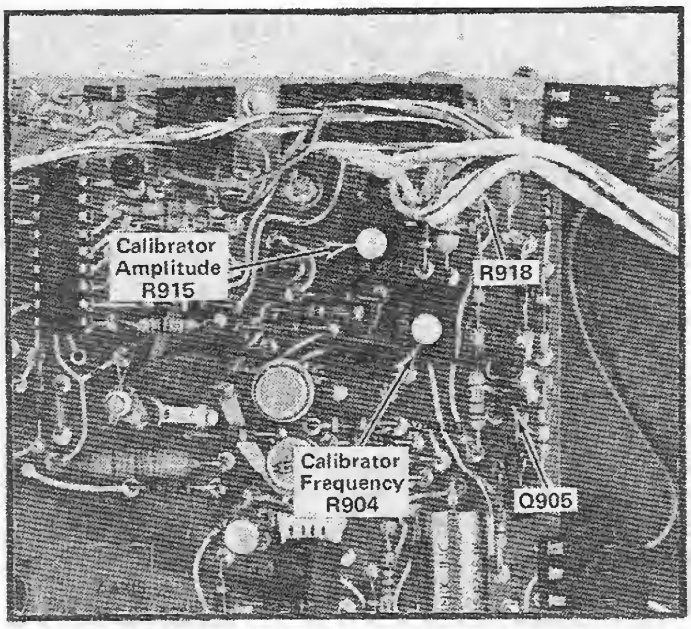

Fig. 5-13. Location of Calibrator circuit components.

e. Disconnect the Precision DC Voltmeter and replace Q905 in its socket.

45. Adjust Calibrator Repetition Rate

NOTE

If a frequency counter with an accuracy of at least 0.1% is available (such as Tektronix 7D14 Digital Counter), it can be used to check the accuracy of the Calibrator.

a. Connect a 10X probe (432 standard accessory) to the CH 1 input connector. Connect the tip of the probe to the top of R918 (see Fig. 5-13).

b. Connect the output of the Time-Mark Generator to the CH 2 input connector via a 42-inch 50 Ω BNC cable. Set the Time-Mark Generator for 1 millisecond time marks.

c. Adjust the VOLTS/DIV switches for approximately two divisions of display of each signal.

d. Set the Vertical Mode to ADD.

e. Adjust the TRIGGER LEVEL control so a triggered trace is presented only when the time marks occur during the positive portion of the calibrator square wave.

f. Set the TRIGGER COUPLING to LF REJ, the Sweep MODE to NORM, and the TIME/DIV to .2 S/DIV.

g. CHECK–The amount of time required for a time-mark to drift across the positive level of the calibrator square wave to the negative level and back to the positive level must be at least 0.4 second (0.1 second if this measurement is being made outside of the +20°C to +30°C temperature range). This time can be measured directly from the display by observing the number of divisions that the time mark moves across the display area before it returns to the positive level.

h. ADJUST–If the limits of the CHECK– step are not met set the TRIGGER SOURCE to CH 1, TRIGGER COUPLING to AC, and the TIME/DIV to .2 ms. Adjust the TRIGGER LEVEL control for a stable display and adjust Calibrator Frequency adjustment R904 (see Fig. 5-13) for minimum drift of the time marks across the calibrator waveform. Recheck repetition rate accuracy in the manner given in steps a through g.

i. Disconnect all test equipment.

This completes the calibration procedure for the 434 Oscilloscope. Replace the instrument wrap-around cabinet. If the instrument has been completely checked and adjusted to the tolerances given in this procedure, it will meet or exceed the specifications given in Section 1.

SECTION 6
RACKMOUNTING

Change information, if any, affecting this section will be found at the rear of this manual.

Introduction

The Tektronix R434 Oscilloscope is designed to mount in a standard 19-inch rack. When mounted in accordance with the following mounting procedure this instrument will meet all electrical and environmental characteristics given in section 1.

Rack Dimensions

Height. At least 5 1/4 inches of vertical space is required to mount this instrument in a rack.

Width. Minimum width of the opening between the left and right front rails of the rack must be 17 5/8 inches.

Depth. Total depth necessary to mount the R434 in a cabinet rack is 18 inches. This allows room for air circulation, power cord connection and the necessary mounting hardware.

Mounting Procedure

The following mounting procedure uses the Rack Adapter Assembly and the included Rackmount Hardware Kit to insure meeting the environmental characteristics of the instrument. If alternative methods of mounting are used, the instrument may not meet the given environmental characteristics for shock and vibration.

Use the following procedure to install the R434 in a rack:

1. Remove the instrument from the Rack Adapter Assembly in the manner given for cabinet removal in section 4 of this manual.

2. Select the proper front-rail mounting holes in the instrument using the measurements shown in Fig. 6-1.

3. Slide the Rack Adapter Assembly into the rack and align the screw-holes in the Rack Adapter Assembly front panel with the screw holes in the rack front rails that were selected in step 2.

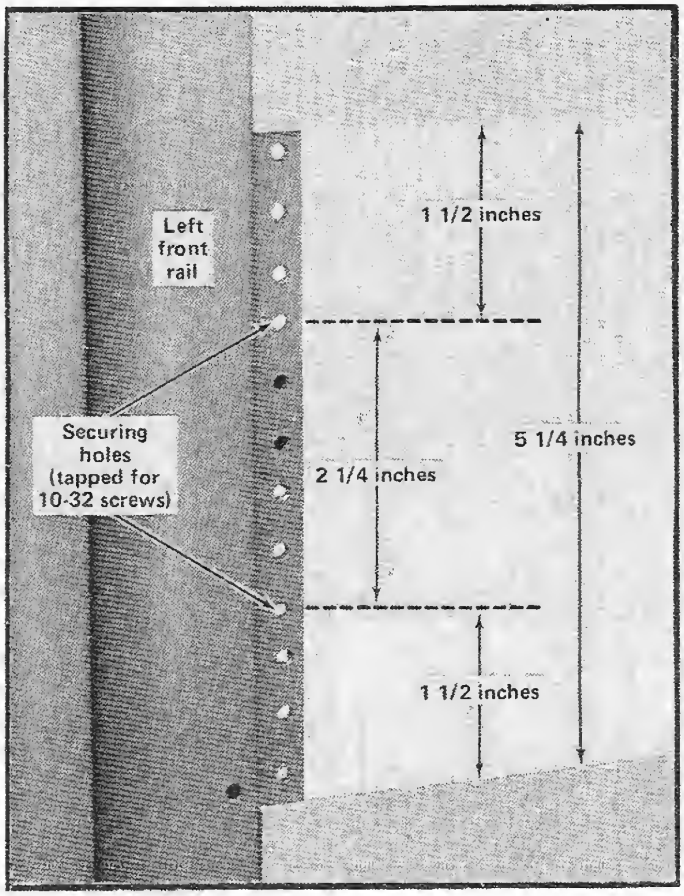

Fig. 6-1. Locating the mounting holes in the rack front rails.

4. Secure the Rack Adapter Assembly to the front-rails of the rack. Use the appropriate screws with a plastic washer and finishing washer on each screw from the hardware kit provided. See Figs. 6-2 and 6-3.

5. Position the bracket extensions (provided in the hardware kit) over the rear supports of the Rack Adapter Assembly.

6. Using the Rack Adapter Assembly and the rear rack rails as guides, loosely secure the bracket extensions to the rear supports of the Rack Adapter Assembly approximately in their final permanent positions. Refer to Fig. 6-4.

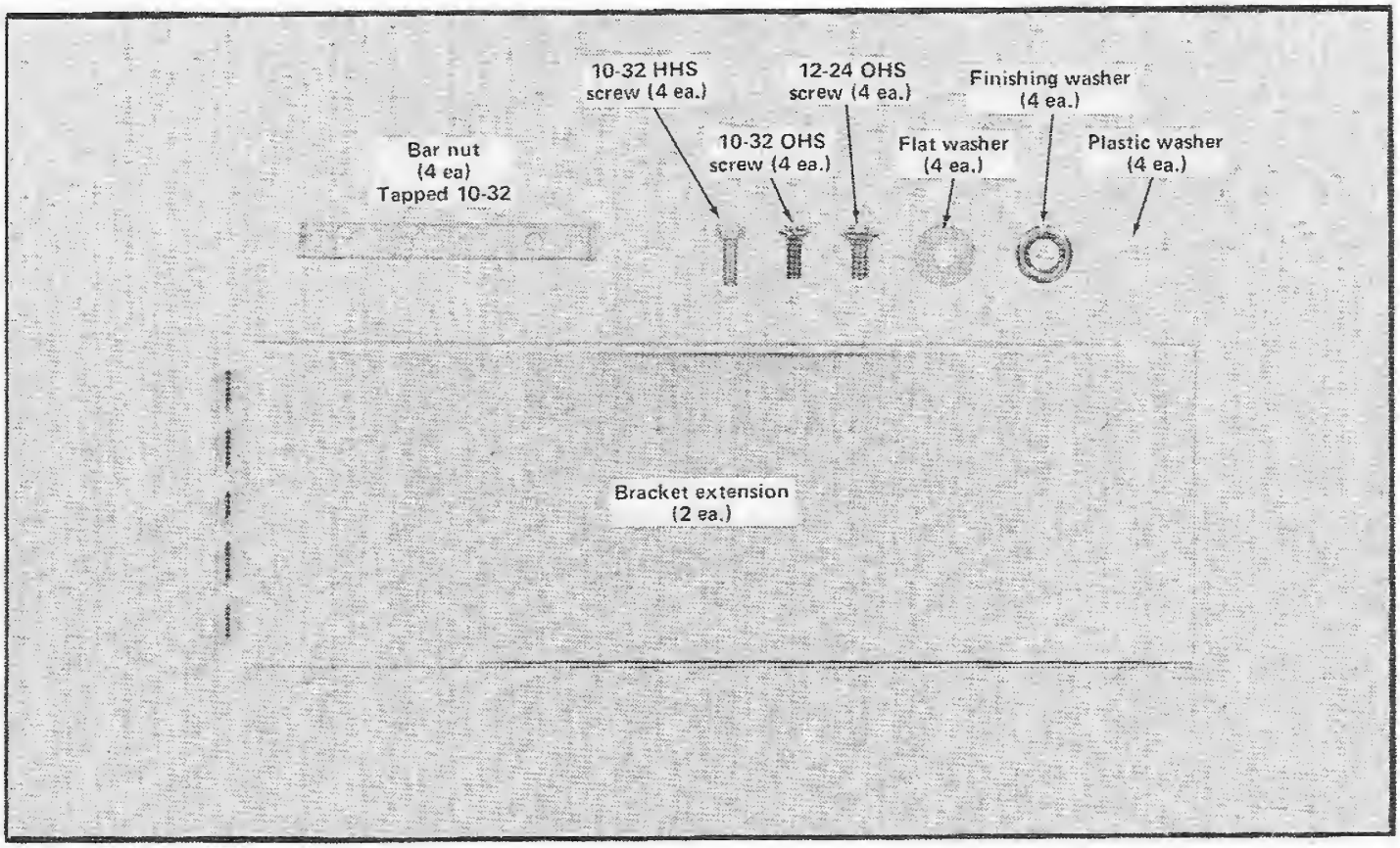

Fig. 6-2. Hardware needed to mount the instrument in the cabinet rack.

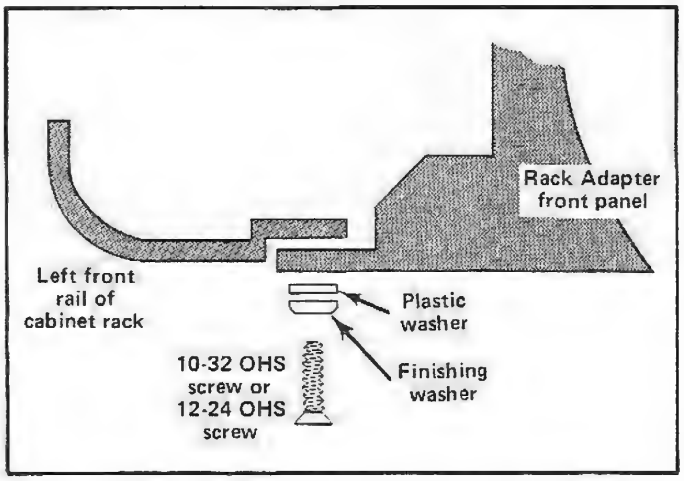

Fig. 6-3. Mounting the instrument to the front rails.

7. Secure the bracket extensions to the rear rails of the rack. Refer to Fig. 6-4 for hardware and positioning information.

8. Tighten the hardware securing the bracket extensions to the rear supports of the Rack Adapter Assembly. The Rack Adapter Assembly should now be completely installed in the rack.

9. Install the 434 Oscilloscope in the Rack Adapter Assembly in the manner given in section 4 of this manual.

Portable Conversion

The 434 is readily converted from a rack-mounted instrument to a portable instrument or vice versa. To rack-mount a portable 434, order the Rack Adapter Assembly Tektronix Part Number 016-0272-00. Remove the instrument from the portable wrap-around cabinet and install it in the Rack Adapter Assembly.

Conversely, to use an R434 as a portable instrument, order the 434 portable oscilloscope wrap-around cabinet Tektronix Part Number 390-0187-00 and the front cover Tektronix Part Number 200-1203-00. Remove the instrument from the Rack Adapter Assembly and install the portable wrap-around and front cover. Refer to section 4 of this manual for instrument removal instructions.

Rear Panel Signal Connections

The three signal input connectors on the rear panel of the 434 are not readily accessible when the instrument is rack mounted. Provisions have been made, however, to make these inputs available at the front panel of the instrument if so desired. Each signal connection requires one 30-inch 50-ohm BNC cable Tektronix Part Number

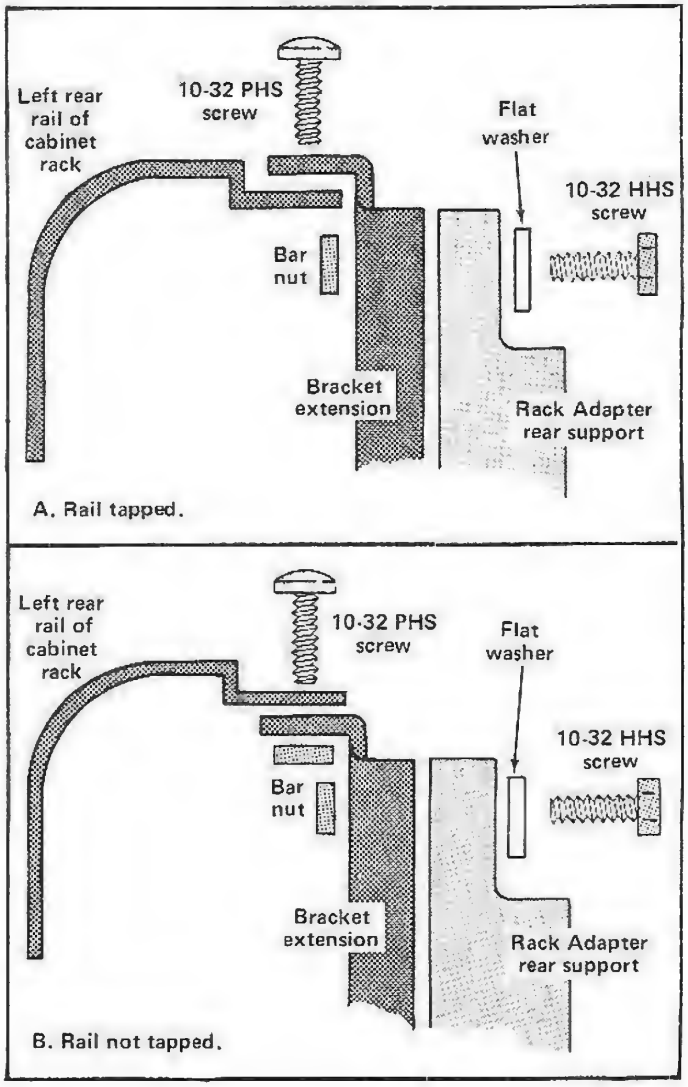

Fig. 6-4. Installing the rear bracket extensions.

012-0117-00, one chassis-mount BNC thru-connector Tektronix Part Number 103-0070-00, and, if vertical clearance above the rear panel connectors is less than approximately 1 1/4 inches, one BNC 90° elbow Tektronix Part Number 103-0031-00.

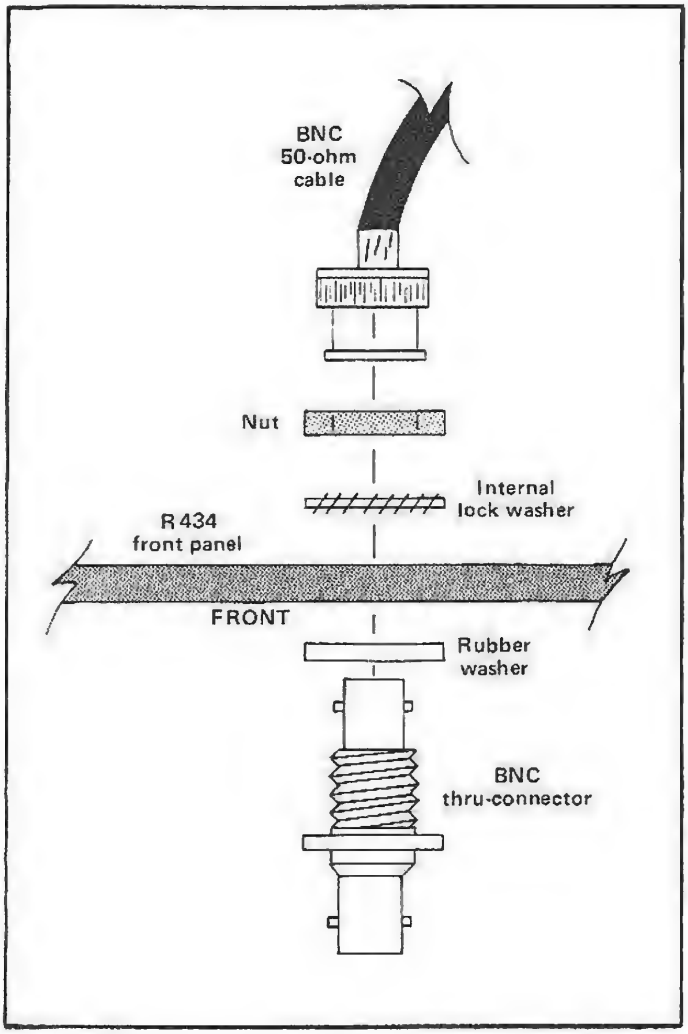

Fig. 6-5. Mounting a chassis-mount BNC thru-connector.

Remove a plastic plug from the front panel of the R434. Mount a BNC thru-connector in the hole in the front panel (see Fig. 6-5). Connect the newly-mounted BNC connector to the desired rear-panel input connector with the 30-inch 50-ohm BNC cable. If insufficient vertical clearance is available over the rear panel connector, use the BNC 90° elbow to make the connection.

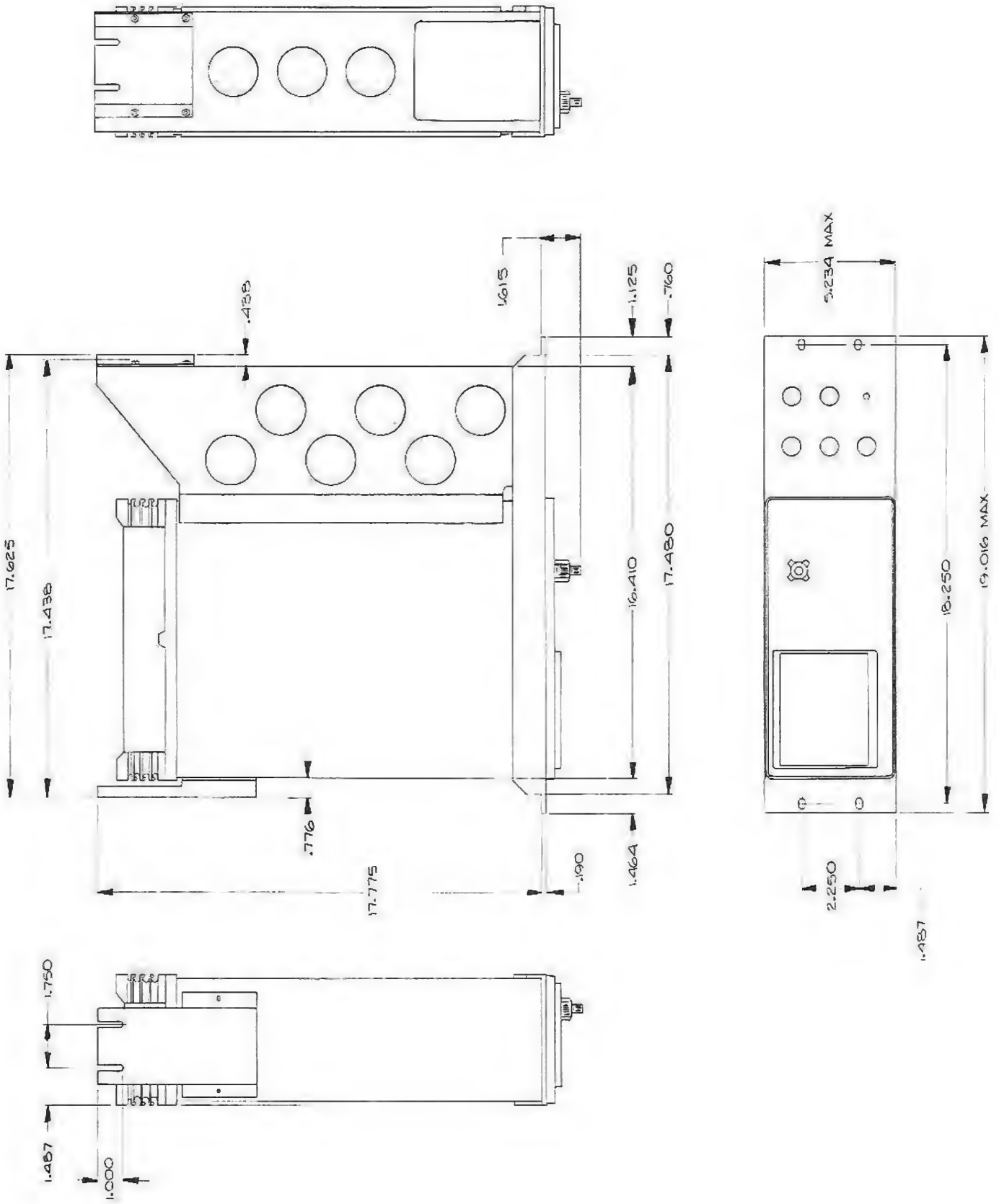

Fig. 6-6. Dimensional drawing.

PARTS LIST ABBREVIATIONS

BHB	binding head brass
BHS	binding head steel
cap.	capacitor
cer	ceramic
comp	composition
conn	connector
CRT	cathode-ray tube
csk	countersunk
DE	double end
dia	diameter
div	division
elect.	electrolytic
EMC	electrolytic, metal cased
EMT	electrolytic, metal tubular
ext	external
F & I	focus and intensity
FHB	flat head brass
FHS	flat head steel
Fil HB	fillister head brass
Fil HS	fillister head steel
h	height or high
hex.	hexagonal
HHB	hex head brass
HHS	hex head steel
HSB	hex socket brass
HSS	hex socket steel
ID	inside diameter
inc	incandescent
int	internal
lg	length or long
met.	metal
mtg hdw	mounting hardware
OD	outside diameter
OHB	oval head brass
OHS	oval head steel
P/O	part of
PHB	pan head brass
PHS	pan head steel
plstc	plastic
PMC	paper, metal cased
poly	polystyrene
prec	precision
PT	paper, tubular
PTM	paper or plastic, tubular, molded
RHB	round head brass
RHS	round head steel
SE	single end
SN or S/N	serial number
S or SW	switch
TC	temperature compensated
THB	truss head brass
thk	thick
THS	truss head steel
tub.	tubular
var	variable
w	wide or width
WW	wire-wound

PARTS ORDERING INFORMATION

Replacement parts are available from or through your local Tektronix, Inc. Field Office or representative.

Changes to Tektronix instruments are sometimes made to accommodate improved components as they become available, and to give you the benefit of the latest circuit improvements developed in our engineering department. It is therefore important, when ordering parts, to include the following information in your order: Part number, instrument type or number, serial or model number, and modification number if applicable.

If a part you have ordered has been replaced with a new or improved part, your local Tektronix, Inc. Field Office or representative will contact you concerning any change in part number.

SPECIAL NOTES AND SYMBOLS

X000	Part first added at this serial number
00X	Part removed after this serial number
*000-0000-00	Asterisk preceding Tektronix Part Number indicates manufactured by or for Tektronix, Inc., or reworked or checked components.
Use 000-0000-00	Part number indicated is direct replacement.

SECTION 7
ELECTRICAL PARTS LIST

CHASSIS

Values are fixed unless marked Variable.

Ckt. No.	Tektronix Part No.	Serial/Model No. Eff	Serial/Model No. Disc	Description			
				Capacitors			
Tolerance ±20% unless otherwise indicated.							
C5	283-0023-00			0.1 μF	Cer	10 V	
C15	283-0023-00			0.1 μF	Cer	10 V	
C22	283-0067-00			0.001 μF	Cer	200 V	10%
C32	283-0067-00			0.001 μF	Cer	200 V	10%
C94	283-0189-00			0.1 μF	Cer	400 V	
C536	283-0057-00			0.1 μF	Cer	500 V	
C1016	290-0515-00			200 μF	Elect.	450 V	+50%—10%
				Semiconductor Device, Diodes			
CR1084	152-0413-00			Silicon	Rectifier, fast recovery, 400 V, 0.75 A		
VR1084	152-0298-00			Zener	1N3816 1.5 W, 140 V, 5%		
VR1085	152-0297-00			Zener	1N3814B 1.5 W, 110 V, 5%		
				Bulbs			
DS20	150-0109-00			Incandescent, 18 V, 26 mA			
DS22	150-0109-00			Incandescent, 18 V, 26 mA			
DS30	150-0109-00			Incandescent, 18 V, 26 mA			
DS32	150-0109-00			Incandescent, 18 V, 26 mA			
DS65	150-0035-00			Neon, A1D-T, 0.3 mA			
				Fuse			
F1000	159-0016-00			Cartridge	1.5 A	Fast-Blo	
				Connectors			
J1	131-0679-00			BNC, receptacle, electrical			
J10	131-0679-00			BNC, receptacle, electrical			
J70	131-0955-00			BNC, receptacle, electrical			
J80	131-0955-00			BNC, receptacle, electrical			
J85	131-0955-00			BNC, receptacle, electrical			
J95	136-0098-01			Jack, tip			

CHASSIS (cont)

Ckt. No.	Tektronix Part No.	Serial/Model No. Eff	Disc	Description
				Inductors
L100	*108-0657-00			Beam rotator
L533	*114-0309-00			9.6-18.7 μH, Var Core 276-0511-00
L584	*114-0309-00			9.6-18.7 μH, Var Core 276-0511-00
LR9	*108-0286-00			0.17 μH (wound on a 36 Ω, 1/8 W, 5% resistor)
LR19	*108-0286-00			0.17 μH (wound on a 36 Ω, 1/8 W, 5% resistor)
LR533	*108-0659-00			1.5 μH (wound on a 1.6 kΩ, 1/4 W, 5% resistors)
LR584	*108-0659-00			1.5 μH (wound on a 1.6 kΩ, 1/4 W, 5% resistors)
				Transistors
Q530	151-0124-00			Silicon NPN TO-5 Selected from 2N3119
Q580	151-0124-00			Silicon NPN TO-5 Selected from 2N3119
Q1080	151-0314-00			Silicon NPN TO-3 Replaceable by 2N5157
				Resistors
Resistors are fixed, composition, ±10% unless otherwise indicated.				
R22	311-0546-00			10 kΩ, Var
R32	311-0546-00			10 kΩ, Var
R40	311-1115-00			5 kΩ x 5 kΩ, Var
R41	321-0121-00			178 Ω 1/8 W Prec 1%
R42	321-0121-00			178 Ω 1/8 W Prec 1%
R44	311-1115-00			5 kΩ x 5 kΩ, Var
R50	315-0271-00			270 Ω 1/4 W 5%
R55A,B	311-0429-00			100 kΩ x 10 kΩ, Var
R60A,B[1]	311-1117-00			10 kΩ x 50 kΩ, Var
R80	311-0086-00			2.5 kΩ, Var
R82A,B	311-1207-00			5 MΩ x 1 kΩ, Var
R83	301-0166-00			16 MΩ 1/2 W 5%
R85	311-1200-00			100 kΩ, Var
R90	316-0472-00			4.7 kΩ 1/4 W
R92[2]	311-1190-00			10 kΩ, Var
R94	316-0221-00			220 Ω 1/4 W
R95	316-0562-00			5.6 kΩ 1/4 W
R535	*310-0694-00			1.25 kΩ 10 W WW 1%
R536	303-0470-00			47 Ω 1 W 5%
R586	*310-0694-00			1.25 kΩ 10 W WW 1%
R1002	308-0555-00			5 Ω 3 W WW 5%
R1016	306-0474-00			470 kΩ 2 W

[1]Furnished as a unit with S60.

[2]Furnished as a unit with S95.

CHASSIS (cont)

Ckt. No.	Tektronix Part No.	Serial/Model No. Eff	Disc	Description
		Switches		
	Wired or Unwired			
S50	260-0735-00		Push	BEAM FINDER
S60[1]				SLOPE
S65	260-1229-00		Pushbutton	MODE
S68	260-0735-00		Push	RESET
S94	260-1285-00		Push	INTEGRATE
S95[2]			Pushbutton	LOCATE
S1002	260-0724-00		Thermostatic, opens at 83.3°C, closes at 66.3°C	
		Electron Tube		
V100	*154-0650-00		CRT	

A1 INPUT AMPLIFIER Circuit Board Assembly

*670-1357-00	Complete Board

Capacitors

Resistors are fixed, composition, ±10% unless otherwise indicated.

C121	283-0001-00	0.005 μF	Cer	500 V	
C124	283-0111-00	0.1 μF	Cer	50 V	
C125	283-0080-00	0.022 μF	Cer	25 V	+80%—20%
C126	283-0111-00	0.1 μF	Cer	50 V	
C135	283-0023-00	0.1 μF	Cer	10 V	
C171	283-0001-00	0.005 μF	Cer	500 V	
C174	283-0111-00	0.1 μF	Cer	50 V	
C175	283-0080-00	0.022 μF	Cer	25 V	+80%—20%
C176	283-0111-00	0.1 μF	Cer	50 V	
C185	283-0023-00	0.1 μF	Cer	10 V	
C187	290-0517-00	6.8 μF	Elect.	35 V	
C189	290-0517-00	6.8 μF	Elect.	35 V	

[1]Furnished as a unit with R60A,B.

[2]Furnished as a unit with R92.

A1 INPUT AMPLIFIER Circuit Board Assembly (cont)

Ckt. No.	Tektronix Part No.	Serial/Model No. Eff	Disc	Description
		Semiconductor Device, Diodes		
CR122	*152-0321-00			Silicon Tek Spec
CR172	*152-0321-00			Silicon Tek Spec
VR124	152-0279-00			Zener 1N751A 400 mW, 5.1 V, 5%
VR126	152-0279-00			Zener 1N751A 400 mW, 5.1 V, 5%
VR174	152-0279-00			Zener 1N751A 400 mW, 5.1 V, 5%
VR176	152-0279-00			Zener 1N751A 400 mW, 5.1 V, 5%
		Transistors		
Q124A,B	151-1032-00			Silicon FET TO-5 Dual
Q174A,B	151-1032-00			Silicon FET TO-5 Dual
		Resistors		

Resistors are fixed, composition, ±10% unless otherwise indicated.

R120	321-0481-00	1 MΩ	1/8 W	Prec	1%
R121	316-0104-00	100 kΩ	1/4 W		
R122	316-0470-00	47 Ω	1/4 W		
R125	321-0030-00	20 Ω	1/8 W	Prec	1%
R126	321-0030-00	20 Ω	1/8 W	Prec	1%
R134	315-0393-00	39 kΩ	1/4 W		5%
R135	315-0151-00	150 Ω	1/4 W		5%
R170	321-0481-00	1 MΩ	1/8 W	Prec	1%
R171	316-0104-00	100 kΩ	1/4 W		
R172	316-0470-00	47 Ω	1/4 W		
R175	321-0030-00	20 Ω	1/8 W	Prec	1%
R176	321-0030-00	20 Ω	1/8 W	Prec	1%
R184	315-0393-00	39 kΩ	1/4 W		5%
R185	315-0151-00	150 Ω	1/4 W		5%
R187	315-0820-00	82 Ω	1/4 W		5%
R189	315-0820-00	82 Ω	1/4 W		5%

A2 VERTICAL Circuit Board Assembly

*670-1365-00	B010100	B029999	Complete Board
*670-1365-01	B030000		Complete Board

Capacitors

Tolerance ±20% unless otherwise indicated.

C216	281-0622-00	47 pF	Cer	500 V	1%
C217	281-0093-00	5.5-18 pF, Var	Cer		
C220	281-0092-00	9-35 pF, Var	Cer		
C221	281-0603-00	39 pF	Cer	500 V	5%
C222	281-0602-00	68 pF	Cer	500 V	5%

®

A2 VERTICAL Circuit Board Assembly (cont)

Ckt. No.	Tektronix Part No.	Serial/Model No. Eff	Disc	Description		
				Capacitors (cont)		
C223	281-0092-00			9-35 pF, Var	Cer	
C224	281-0579-00			21 pF	Cer	500 V 5%
C225	281-0091-00			2-8 pF, Var	Cer	
C226	281-0064-00			0.25-1.5 pF, Var	Plastic	
C227	281-0670-00			1.8 pF	Cer	500 V ±0.1 pF
C231	281-0709-00			7 pF	Cer	500 V ±0.1 pF
C234	283-0111-00			0.1 pF	Cer	50 V
C252	281-0656-00			22 pF	Cer	200 V 5%
C253	283-0111-00			0.1 μF	Cer	50 V
C256	283-0000-00			0.001 μF	Cer	500 V
C258	281-0626-00			3.3 pF	Cer	500 V 5%
C262	281-0656-00			22 pF	Cer	200 V 5%
C272	283-0080-00			0.022 μF	Cer	25 V +80%—20%
C282	283-0080-00			0.022 μF	Cer	25 V +80%—20%
C316	281-0622-00			47 pF	Cer	500 V 1%
C317	281-0093-00			5.5-18 pF, Var	Cer	
C320	281-0092-00			9-35 pF, Var	Cer	
C321	281-0540-00			51 pF	Cer	500 V 5%
C322	281-0602-00			68 pF	Cer	500 V 5%
C323	281-0158-00			7-45 pF, Var		
C324	283-0109-00			27 pF	Cer	1000 V 5%
C325	281-0091-00			2-8 pF, Var	Cer	
C326	281-0064-00			0.25-1.5 pF, Var	Plastic	
C327	281-0661-00			0.8 pF	Cer	500 V ±0.1 pF
C331	281-0709-00			7 pF	Cer	500 V ±0.1 pF
C334	283-0111-00			0.1 μF	Cer	50 V
C352	281-0656-00			22 pF	Cer	200 V 5%
C353	283-0111-00			0.1 μF	Cer	50 V
C356	283-0000-00			0.001 μF	Cer	500 V
C357	290-0517-00			6.8 μF	Elect.	35 V
C359	290-0517-00			6.8 μF	Elect.	35 V
C360	290-0523-00			2.2 μF	Elect.	20 V
C362	281-0656-00			22 pF	Cer	200 V 5%
C404	290-0523-00			2.2 μF	Elect.	20 V
C408	290-0523-00			2.2 μF	Elect.	20 V
C410	290-0523-00			2.2 μF	Elect.	20 V
C414	290-0523-00			2.2 μF	Elect.	20 V
C421	281-0629-00			33 pF	Cer	600 V 5%
C424	281-0629-00			33 pF	Cer	600 V 5%
C425	283-0238-00			0.01 μF	Cer	50 V 10%

A2 VERTICAL Circuit Board Assembly (cont)

Ckt. No.	Tektronix Part No.	Serial/Model No. Eff	Disc	Description			
				Capacitors (cont)			
C426	290-0523-00			2.2 μF	Elect.	20 V	
C430	283-0060-00			100 pF	Cer	200 V	5%
C435	290-0523-00			2.2 μF	Elect.	20 V	
C436	283-0080-00			0.022 μF	Cer	25 V	+80%—20%
C442	283-0059-00			1 μF	Cer	25 V	+80%—20%
C452	283-0080-00			0.022 μF	Cer	25 V	+80%—20%
C456	281-0622-00			47 pF	Cer	500 V	1%
C460	281-0655-00			9.7 pF	Cer	500 V	±0.1 pF
C461	281-0093-00			5.5-18 pF, Var	Cer		
C463	283-0010-00			0.05 μF	Cer	50 V	
C472	281-0622-00			47 pF	Cer	500 V	1%
C479	281-0551-00			390 pF	Cer	500 V	10%
C500	281-0616-00			6.8 pF	Cer	200 V	
C510	283-0111-00			0.1 μF	Cer	50 V	
C525	283-0032-00			470 pF	Cer	500 V	5%
C540	281-0616-00			6.8 pF	Cer	200 V	
C565	283-0032-00			470 pF	Cer	500 V	5%
C570	281-0540-00			51 pF	Cer	500 V	5%
C572	281-0123-00			5-25 pF, Var	Cer	100 V	
C578	290-0517-00			6.8 μF	Elect.	35 V	
				Semiconductor Device, Diodes			
CR256	*152-0185-00			Silicon	Replaceable by 1N4152		
CR270	*152-0185-00			Silicon	Replaceable by 1N4152		
CR273	*152-0185-00			Silicon	Replaceable by 1N4152		
CR275	*152-0185-00			Silicon	Replaceable by 1N4152		
CR280	*152-0185-00			Silicon	Replaceable by 1N4152		
CR283	*152-0185-00			Silicon	Replaceable by 1N4152		
CR285	*152-0185-00			Silicon	Replaceable by 1N4152		
CR356	*152-0185-00			Silicon	Replaceable by 1N4152		
CR404	152-0141-02			Silicon	1N4152		
CR405	152-0141-02			Silicon	1N4152		
CR406	152-0141-02			Silicon	1N4152		
CR408	152-0141-02			Silicon	1N4152		
CR410	152-0141-02			Silicon	1N4152		
CR411	152-0141-02			Silicon	1N4152		
CR412	152-0141-02			Silicon	1N4152		
CR414	152-0141-02			Silicon	1N4152		
CR426	*152-0185-00			Silicon	Replaceable by 1N4152		
CR428	*152-0185-00			Silicon	Replaceable by 1N4152		
CR431	*152-0185-00			Silicon	Replaceable by 1N4152		
CR432	*152-0185-00			Silicon	Replaceable by 1N4152		

A2 VERTICAL Circuit Board Assembly (cont)

Ckt. No.	Tektronix Part No.	Serial/Model No. Eff	Disc	Description
		Semiconductor Device, Diodes (cont)		
CR433	*152-0185-00			Silicon Replaceable by 1N4152
CR440	*152-0185-00			Silicon Replaceable by 1N4152
CR521	*152-0185-00			Silicon Replaceable by 1N4152
CR551	*152-0185-00			Silicon Replaceable by 1N4152
VR227	152-0279-00			Zener 1N751A 400 mW, 5.1 V, 5%
VR327	152-0279-00			Zener 1N751A 400 mW, 5.1 V, 5%
		Transistors		
Q200	*151-0281-00			Silicon NPN TO-98 Tek Spec
Q202	*151-0192-00			Silicon NPN TO-92 Replaceable by MPS 6521
Q255	151-0220-00			Silicon PNP TO-18 2N4122
Q265	151-0220-00			Silicon PNP TO-18 2N4122
Q275	151-0221-00			Silicon PNP TO-18 2N4258
Q278	151-0221-00			Silicon PNP TO-18 2N4258
Q280	*151-0190-01			Silicon NPN TO-106 Tek Spec
Q300	*151-0281-00			Silicon NPN TO-98 Tek Spec
Q302	*151-0192-00			Silicon NPN TO-92 Replaceable by MPS 6521
Q355	151-0220-00			Silicon PNP TO-18 2N4122
Q365	151-0220-00			Silicon PNP TO-18 2N4122
Q420	151-0223-00			Silicon NPN TO-18 2N4275
Q425	151-0223-00			Silicon NPN TO-18 2N4275
Q435	151-0223-00			Silicon NPN TO-18 2N4275
Q440	151-0223-00			Silicon NPN TO-18 2N4275
Q454	151-0220-00			Silicon PNP TO-18 2N4122
Q470	151-0220-00			Silicon PNP TO-18 2N4122
Q505	151-0220-00			Silicon PNP TO-18 2N4122
Q515	*151-0198-00			Silicon NPN TO-92 Replaceable by MPS 918
Q520	*151-0230-00			Silicon NPN TO-105 Selected from RCA 40235
Q525	*151-0127-00			Silicon NPN TO-18 Selected from 2N2369
Q545	151-0220-00			Silicon PNP TO-18 2N4122
Q550	*151-0230-00			Silicon NPN TO-105 Selected from RCA 40235
Q555	*151-0198-00			Silicon NPN TO-92 Replaceable by MPS 918
Q565	*151-0127-00			Silicon NPN TO-18 Selected from 2N2369
		Resistors		
Resistors are fixed, composition, ±10% unless otherwise indicated.				
R200	316-0274-00			270 kΩ ¼ W
R202	316-0682-00			6.8 kΩ ¼ W
R204	316-0152-00			1.5 kΩ ¼ W
R210	316-0103-00			10 kΩ ¼ W
R212	311-1232-00			50 kΩ, Var

A2 VERTICAL Circuit Board Assembly (cont)

Ckt. No.	Tektronix Part No.	Serial/Model No. Eff	Disc	Description			
				Resistors (cont)			
R214	316-0103-00			10 kΩ	1/4 W		
R216	321-0104-00			118 Ω	1/8 W	Prec	1%
R217	315-0160-00			16 Ω	1/4 W		5%
R220	321-0907-02			98 Ω (nominal value)		Selected	
R221	315-0331-00			330 Ω	1/4 W		5%
R223	321-0131-00			226 Ω	1/8 W	Prec	1%
R224	315-0391-00			390 Ω	1/4 W		5%
R225	321-0172-00			604 Ω	1/8 W	Prec	1%
R226	321-0151-00			365 Ω	1/8 W	Prec	1%
R228	321-0317-00			19.6 kΩ	1/8 W	Prec	1%
R229	321-0120-00			174 Ω	1/8 W	Prec	1%
R230	321-0172-00			604 Ω	1/8 W	Prec	1%
R231	315-0561-00			560 Ω	1/4 W		5%
R232	321-0204-00			1.3 kΩ	1/8 W	Prec	1%
R235	321-0202-00			1.24 kΩ	1/8 W	Prec	1%
R236	321-0172-00			604 Ω	1/8 W	Prec	1%
R238	321-0204-00			1.3 kΩ	1/8 W	Prec	1%
R240	321-0053-00			34.8 Ω	1/8 W	Prec	1%
R242	316-0101-00			100 Ω	1/4 W		
R244	311-1116-00			100 Ω, Var			
R246	321-0053-00			34.8 Ω	1/8 W	Prec	1%
R250	321-0175-00			649 Ω	1/8 W	Prec	1%
R252	321-0181-00			750 Ω	1/8 W	Prec	1%
R253	316-0270-00			27 Ω	1/4 W		
R255	316-0101-00			100 Ω	1/4 W		
R256	321-0232-00			2.55 kΩ	1/8 W	Prec	1%
R258	321-0255-00			4.42 kΩ	1/8 W	Prec	1%
R260	321-0175-00			649 Ω	1/8 W	Prec	1%
R262	321-0181-00			750 Ω	1/8 W	Prec	1%
R265	316-0101-00			100 Ω	1/4 W		
R270	316-0104-00			100 kΩ	1/4 W		
R273	321-0256-00			4.53 kΩ	1/8 W	Prec	1%
R274	311-1198-00			20 kΩ, Var			
R275	321-0207-00			1.4 kΩ	1/8 W	Prec	1%
R276	321-0177-00			681 Ω	1/8 W	Prec	1%
R277	321-0177-00			681 Ω	1/8 W	Prec	1%
R278	321-0226-00	B010100	B029999	2.21 kΩ	1/8 W	Prec	1%
R278	321-0182-00	B030000		768 Ω	1/8 W	Prec	1%
R279	321-0226-00	B010100	B029999	2.21 kΩ	1/8 W	Prec	1%
R279	321-0182-00	B030000		768 Ω	1/8 W	Prec	1%
R280	316-0104-00			100 kΩ	1/4 W		
R281	315-0302-00			3 kΩ	1/4 W		5%

A2 VERTICAL Circuit Board Assembly (cont)

Ckt. No.	Tektronix Part No.	Serial/Model No. Eff	Disc	Description		
				Resistors (cont)		
R282	316-0152-00			1.5 kΩ	1/4 W	
R283	321-0256-00			4.53 kΩ	1/8 W	Prec 1%
R284	311-1198-00			20 kΩ, Var		
R285	321-0242-00			3.24 kΩ	1/8 W	Prec 1%
R286	315-0202-00			2 kΩ	1/4 W	5%
R287	321-0230-00			2.43 kΩ	1/8 W	Prec 1%
R288	321-0230-00			2.43 kΩ	1/8 W	Prec 1%
R289	321-0301-00			13.3 kΩ	1/8 W	Prec 1%
R300	316-0274-00			270 kΩ	1/4 W	
R302	316-0682-00			6.8 kΩ	1/4 W	
R304	316-0152-00			1.5 kΩ	1/4 W	
R310	316-0103-00			10 kΩ	1/4 W	
R312	311-1232-00			50 kΩ, Var		
R314	316-0103-00			10 kΩ	1/4 W	
R316	321-0104-00			118 Ω	1/8 W	Prec 1%
R317	315-0160-00			16 Ω	1/4 W	5%
R320	321-0907-02			98 Ω (nominal value)		Selected
R321	315-0241-00			240 Ω	1/4 W	5%
R323	321-0131-00			226 Ω	1/8 W	Prec 1%
R324	315-0331-00			330 Ω	1/4 W	5%
R325	321-0172-00			604 Ω	1/8 W	Prec 1%
R326	321-0221-00			1.96 kΩ	1/8 W	Prec 1%
R328	321-0317-00			19.6 kΩ	1/8 W	Prec 1%
R329	321-0120-00			174 Ω	1/8 W	Prec 1%
R330	321-0172-00			604 Ω	1/8 W	Prec 1%
R331	315-0911-00			910 Ω	1/4 W	5%
R332	321-0204-00			1.3 kΩ	1/8 W	Prec 1%
R335	321-0202-00			1.24 kΩ	1/8 W	Prec 1%
R336	321-0172-00			604 Ω	1/8 W	Prec 1%
R338	321-0204-00			1.3 kΩ	1/8 W	Prec 1%
R340	321-0053-00			34.8 Ω	1/8 W	Prec 1%
R342	316-0101-00			100 Ω	1/4 W	
R344	311-1116-00			100 Ω, Var		
R346	321-0053-00			34.8 Ω	1/8 W	Prec 1%
R347	316-0103-00			10 kΩ	1/4 W	
R348	311-1035-00			50 kΩ, Var		
R349	316-0103-00			10 kΩ	1/4 W	
R350	321-0175-00			649 Ω	1/8 W	Prec 1%
R352	321-0181-00			750 Ω	1/8 W	Prec 1%
R353	316-0270-00			27 Ω	1/4 W	

A2 VERTICAL Circuit Board Assembly (cont)

Ckt. No.	Tektronix Part No.	Serial/Model No. Eff	Disc	Description		
				Resistors (cont)		
R354	316-0152-00			1.5 kΩ	1/4 W	
R355	316-0101-00			100 Ω	1/4 W	
R356	321-0232-00			2.55 kΩ	1/8 W	Prec 1%
R358	321-0255-00			4.42 kΩ	1/8 W	Prec 1%
R360	321-0175-00			649 Ω	1/8 W	Prec 1%
R362	321-0181-00			750 Ω	1/8 W	Prec 1%
R365	316-0101-00			100 Ω	1/4 W	
R404	321-0273-00			6.81 kΩ	1/8 W	Prec 1%
R408	321-0273-00			6.81 kΩ	1/8 W	Prec 1%
R410	321-0273-00			6.81 kΩ	1/8 W	Prec 1%
R414	321-0273-00			6.81 kΩ	1/8 W	Prec 1%
R419	315-0622-00			6.2 kΩ	1/4 W	5%
R420	321-0193-00			1 kΩ	1/8 W	Prec 1%
R421	321-0210-00			1.5 kΩ	1/8 W	Prec 1%
R422	321-0231-00			2.49 kΩ	1/8 W	Prec 1%
R423	321-0231-00			2.49 kΩ	1/8 W	Prec 1%
R424	321-0210-00			1.5 kΩ	1/8 W	Prec 1%
R425	321-0193-00			1 kΩ	1/8 W	Prec 1%
R426	301-0152-00			1.5 kΩ	1/2 W	5%
R427	301-0152-00			1.5 kΩ	1/2 W	5%
R428	301-0152-00			1.5 kΩ	1/2 W	5%
R429	301-0152-00			1.5 kΩ	1/2 W	5%
R430	315-0203-00			20 kΩ	1/4 W	5%
R431	316-0104-00			100 kΩ	1/4 W	
R432	316-0183-00			18 kΩ	1/4 W	
R433	316-0104-00			100 kΩ	1/4 W	
R435	301-0102-00			1 kΩ	1/2 W	5%
R436	315-0273-00			27 kΩ	1/4 W	5%
R437	317-0100-00			10 Ω	1/8 W	5%
R438	317-0100-00			10 Ω	1/8 W	5%
R439	316-0101-00			100 Ω	1/4 W	
R440	315-0392-00			3.9 kΩ	1/4 W	5%
R442	316-0270-00			27 Ω	1/4 W	
R445	315-0302-00			3 kΩ	1/4 W	5%
R450	321-0263-00			5.36 kΩ	1/8 W	Prec 1%
R452	321-0263-00			5.36 kΩ	1/8 W	Prec 1%
R453	316-0101-00			100 Ω	1/4 W	
R454	321-0208-00			1.43 kΩ	1/8 W	Prec 1%
R455	321-0218-00			1.82 kΩ	1/8 W	Prec 1%
R456	321-0164-00			499 Ω	1/8 W	Prec 1%

A2 VERTICAL Circuit Board Assembly (cont)

Ckt. No.	Tektronix Part No.	Serial/Model No. Eff	Disc	Description		
			Resistors (cont)			
R457	321-0164-00		499 Ω	1/8 W	Prec	1%
R458	321-0088-00		80.6 Ω	1/8 W	Prec	1%
R460	321-0314-00		18.2 kΩ	1/8 W	Prec	1%
R461	311-1227-00		5 kΩ, Var			
R463	315-0473-00		47 kΩ	1/4 W		5%
R465	323-0155-00		402 Ω	1/2 W	Prec	1%
R466	316-0101-00		100 Ω	1/4 W		
R470	321-0228-00		2.32 kΩ	1/8 W	Prec	1%
R471	321-0202-00		1.24 kΩ	1/8 W	Prec	1%
R472	321-0164-00		499 Ω	1/8 W	Prec	1%
R474	321-0164-00		499 Ω	1/8 W	Prec	1%
R476	321-0088-00		80.6 Ω	1/8 W	Prec	1%
R500	321-0092-00		88.7 Ω	1/8 W	Prec	1%
R505	316-0270-00		27 Ω	1/4 W		
R508	321-0179-00		715 Ω	1/8 W	Prec	1%
R510	321-0074-00		57.6 Ω	1/8 W	Prec	1%
R512	316-0820-00		82 Ω	1/4 W		
R515	315-0680-00		68 Ω	1/4 W		5%
R516	316-0470-00		47 Ω	1/4 W		
R518	321-0117-00		162 Ω	1/8 W	Prec	1%
R519	317-0101-00		100 Ω	1/8 W		5%
R520	317-0101-00		100 Ω	1/8 W		5%
R521	321-0178-00		698 Ω	1/8 W	Prec	1%
R525	323-0095-00		95.3 Ω	1/2 W	Prec	1%
R526	315-0512-00		5.1 kΩ	1/4 W		5%
R540	321-0092-00		88.7 Ω	1/8 W	Prec	1%
R545	316-0270-00		27 Ω	1/4 W		
R548	321-0179-00		715 Ω	1/8 W	Prec	1%
R549	317-0101-00		100 Ω	1/8 W		5%
R550	317-0101-00		100 Ω	1/8 W		5%
R551	321-0178-00		698 Ω	1/8 W	Prec	1%
R552	321-0117-00		162 Ω	1/8 W	Prec	1%
R553	316-0820-00		82 Ω	1/4 W		
R555	316-0470-00		47 Ω	1/4 W		
R565	323-0095-00		95.3 Ω	1/2 W	Prec	1%
R566	315-0512-00		5.1 kΩ	1/4 W		5%
R568	321-0060-00		41.2 Ω	1/8 W	Prec	1%
R570	321-0168-00		549 Ω	1/8 W	Prec	1%
R571	315-0361-00		360 Ω	1/4 W		5%
R572	307-0124-00		5 kΩ	Thermal		
R574	321-0060-00		41.2 Ω	1/8 W	Prec	1%
R576	315-0301-00		300 Ω	1/4 W		5%
R578	323-0075-00		59 Ω	1/2 W	Prec	1%

A2 VERTICAL Circuit Board Assembly (cont)

Ckt. No.	Tektronix Part No.	Serial/Model No. Eff	Disc	Description
		Switches		
	Wired or Unwired			
S414	260-1236-00		Push-push	OUT-INVERT
S479	260-1236-00		Push-push	OUT 5 MHz BW
		Transformer		
T435	*120-0459-00		Toroid, 10 turns, bifilar	
		Integrated Circuits		
U210	*155-0050-00		Monolithic, differential pre-amplifier	
U310	*155-0050-00		Monolithic, differential pre-amplifier	

A3 VERTICAL MODE SWITCH Circuit Board Assembly

	*670-1358-00	Complete Board			
		Capacitors			
Tolerance ±20% unless otherwise indicated.					
C8	*285-0816-02	0.019 μF	PTM	600 V	10%
C9	281-0064-00	0.25-1.5 pF, Var	Plastic		
C18	*285-0816-02	0.019 μF	PTM	600 V	10%
C19	281-0064-00	0.25-1.5 pF, Var	Plastic		
C45	283-0080-00	0.022 μF	Cer	25 V	+80%—20%
C47	283-0080-00	0.022 μF	Cer	25 V	+80%—20%
		Resistors			
Resistors are fixed, composition, ±10% unless otherwise indicated.					
R8	316-0105-00	1 MΩ	¼ W		
R18	316-0105-00	1 MΩ	¼ W		

A3 VERTICAL MODE SWITCH Circuit Board Assembly (cont)

Ckt. No.	Tektronix Part No.	Serial/Model No. Eff	Disc	Description
		Switches		
	Wired or Unwired			
S8A S8B	260-1227-00		Push-push	AC/DC GND
S18A S18B	260-1227-00		Push-push	AC/DC GND
S45A-E	260-1230-00		Pushbutton	VERTICAL MODE

ATTENUATOR Circuit Board Assembly

	*672-0019-00	Complete Board includes:
A1	*670-1357-00	INPUT AMPLIFIER Circuit Board Assembly
A2	*670-1365-00	VERTICAL AMPLIFIER Circuit Board Assembly
A4		CAM SWITCH Assembly CH1
A5		CAM SWITCH Assembly CH2

A4 CAM SWITCH ASSEMBLY CH1

Capacitors

Tolerance ±20% unless otherwise indicated.

C106	*307-1010-00	2X Hybrid
C107	*307-1010-00	2X Hybrid
C110	*307-1012-00	5X Hybrid
C111	*307-1012-00	5X Hybrid
C114	*307-1013-00	10X Hybrid
C115	*307-1013-00	10X Hybrid
C118	*307-1014-00	100X Hybrid
C119	*307-1014-00	100X Hybrid

Resistor

Resistors are fixed, composition, ±10% unless otherwise indicated.

R245	*311-1125-00	250 Ω, Var

Switch

	Wired or Unwired		
S100[1]	*105-0227-00	Cam	CH1 VOLTS/DIV

[1]See Mechanical Parts List for replacement parts.

A5 CAM SWITCH ASSEMBLY CH2

Ckt. No.	Tektronix Part No.	Serial/Model No. Eff	Disc	Description
		Capacitors		
Tolerance ±20% unless otherwise indicated.				
C106	*307-1010-00			2X Hybrid
C107	*307-1010-00			2X Hybrid
C110	*307-1012-00			5X Hybrid
C111	*307-1012-00			5X Hybrid
C114	*307-1013-00			10X Hybrid
C115	*307-1013-00			10X Hybrid
C118	*307-1014-00			100X Hybrid
C119	*307-1014-00			100X Hybrid
		Resistor		
Resistors are fixed, composition, ±10% unless otherwise indicated.				
R345	*311-1125-00			250 Ω, Var
		Switch		
	Wired or Unwired			
S200[1]	*105-0227-00			Cam CH2 VOLTS/DIV

A6 TRIGGER SOURCE SWITCH Circuit Board Assembly

*670-1364-00 Complete Board

		Capacitors			
Tolerance ±20% unless otherwise indicated.					
C70	281-0500-00	2.2 pF	Cer	500 V	±0.5 pF
C72	283-0023-00	0.1 μF	Cer	10 V	
C73	283-0003-00	0.01 μF	Cer	150 V	
		Resistors			
Resistors are fixed, composition, ±10% unless otherwise indicated.					
R70	322-0621-00	900 kΩ	¼ W	Prec	1%
R71	321-0617-00	111 kΩ	⅛ W	Prec	1%
R72	316-0471-00	470 Ω	¼ W		

[1]See Mechanical Parts List for replacement parts.

A6 TRIGGER SOURCE SWITCH Circuit Board Assembly (cont)

Ckt. No.	Tektronix Part No.	Serial/Model No. Eff	Disc	Description
		Switches		
	Wired or Unwired			
S70	260-1224-00		Push-push	EXT ATTEN
S72A, S72B	260-1228-00		Pushbutton	TRIGGER SOURCE

A7 TRIGGER COUPLING SWITCH Circuit Board Assembly

*670-1363-00 Complete Board

Capacitors

Tolerance ±20% unless otherwise indicated.

C72	283-0006-00	0.02 μF	Cer	500 V	
C74	283-0128-00	100 pF	Cer	500 V	5%
C76	281-0510-00	22 pF	Cer	500 V	

Resistors

Resistors are fixed, composition, ±10% unless otherwise indicated.

R74	315-0104-00	100 kΩ	¼ W	5%
R76	315-0563-00	56 kΩ	¼ W	5%

Switches

	Wired or Unwired			
S74	260-1224-00	Push-push	AC/DC (TRIGGER COUPLING)	
S75A, S75B	260-1226-00	Push-push	LFREJ/HFREJ (TRIGGER COUPLING)	

A8 HORIZONTAL Circuit Board Assembly

*670-1359-03 Complete Board

Capacitors

Tolerance ±20% unless otherwise indicated.

C602	283-0003-00	0.01 μF	Cer	150 V	
C604	283-0003-00	0.01 μF	Cer	150 V	
C605	283-0080-00	0.022 μF	Cer	25 V	+80%—20%
C614	283-0003-00	0.01 μF	Cer	150 V	
C622	283-0003-00	0.01 μF	Cer	150 V	

A8 HORIZONTAL Circuit Board Assembly (cont)

Ckt. No.	Tektronix Part No.	Serial/Model No. Eff	Disc	Description			
				Capacitors (cont)			
C624	283-0081-00			0.1 μF	Cer	25 V	+80%—20%
C645	283-0067-00			0.001 μF	Cer	200 V	10%
C648	283-0026-00			0.2 μF	Cer	25 V	
C650	290-0527-00			15 μF	Elect.	20 V	
C663	281-0562-00			39 pF	Cer	500 V	
C670	281-0519-00			47 pF	Cer	500 V	10%
C686	281-0504-00			10 pF	Cer	500 V	10%
C688	283-0003-00			0.01 μF	Cer	150 V	
C690	283-0003-00			0.01 μF	Cer	150 V	
C692	281-0511-00			22 pF	Cer	500 V	10%
C700	281-0551-00			390 pF	Cer	500 V	10%
C701	281-0617-00			15 pF	Cer	200 V	
C702	290-0136-00			2.2 μF	Elect.	20 V	
C706	283-0067-00			0.001 μF	Cer	200 V	10%
C709	281-0651-00			47 pF	Cer		5%
C710A[1]				10 μF			
C710B[1]	*295-0150-00			0.1 μF	Matched to 1%		
C710C[1]				0.001 μF			
C715	283-0599-00			98 pF	Mica	500 V	5%
C716	281-0123-00			5-25 pF, Var	Cer	100 V	
C718	290-0246-00			3.3 μF	Elect.	15 V	10%
C720	290-0247-00			5.6 μF	Elect.	6 V	
C722	290-0247-00			5.6 μF	Elect.	6 V	
C730	283-0067-00			0.001 μF	Cer	200 V	10%
C732	283-0004-00			0.02 μF	Cer	150 V	
C734	283-0059-00			1 μF	Cer	25 V	+80%—20%
C742	283-0081-00			0.1 μF	Cer	25 V	+80%—20%
C755	281-0519-00			47 pF	Cer	500 V	10%
C761	290-0527-00			15 μF	Elect.	20 V	
C764	281-0519-00			47 pF	Cer	500 V	10%
C775	283-0003-00			0.01 μF	Cer	150 V	
C780	281-0543-00			270 pF	Cer	500 V	10%
C782	281-0519-00			47 pF	Cer	500 V	10%
C784	283-0001-00			0.005 μF	Cer	500 V	
C794	281-0562-00			39 pF	Cer	500 V	
C796	290-0267-00			1 μF	Elect.	35 V	
C797	283-0004-00			0.02 μF	Cer	150 V	
C798	290-0267-00			1 μF	Elect.	35 V	
C801	290-0246-00			3.3 μF	Elect.	15 V	10%
C805	290-0246-00			3.3 μF	Elect.	15 V	10%

[1]Individual timing capacitors in this assembly must be ordered by the 9 digit part number, letter suffix and tolerance printed on the timing capacitor to be replaced. Example:

F—

285-XXXX-XX

The letter suffix and the tolerance should be the same for all of the timing capacitors in the assembly.

A8 HORIZONTAL Circuit Board Assembly (cont)

Ckt. No.	Tektronix Part No.	Serial/Model No. Eff	Disc	Description			
				Capacitors (cont)			
C811	283-0004-00			0.02 μF	Cer	150 V	
C812	283-0177-00			1 μF	Cer	25 V	+80%—20%
C871	281-0064-00			0.25-1.5 pF, Var	Plastic		
C872	283-0001-00			0.005 μF	Cer	500 V	
C874	283-0008-00			0.1 μF	Cer	500 V	
C876	283-0002-00			0.01 μF	Cer	500 V	
C881	281-0064-00			0.25-1.5 pF, Var	Plastic		
C882	283-0001-00			0.005 μF	Cer	500 V	
C884	283-0008-00			0.1 μF	Cer	500 V	
C886	283-0002-00			0.01 μF	Cer	500 V	
C896	283-0017-00			1 μF	Cer	3 V	
				Semiconductor Device, Diodes			
CR603	152-0246-00			Silicon		Low leakage 250 mW, 40 V	
CR606	*152-0185-00			Silicon		Replaceable by 1N4152	
CR610	*152-0185-00			Silicon		Replaceable by 1N4152	
CR615	*152-0185-00			Silicon		Replaceable by 1N4152	
CR616	*152-0185-00			Silicon		Replaceable by 1N4152	
CR623	*152-0185-00			Silicon		Replaceable by 1N4152	
CR630	*152-0185-00			Silicon		Replaceable by 1N4152	
CR632	*152-0185-00			Silicon		Replaceable by 1N4152	
CR634	*152-0185-00			Silicon		Replaceable by 1N4152	
CR635	*152-0185-00			Silicon		Replaceable by 1N4152	
CR640	*152-0185-00			Silicon		Replaceable by 1N4152	
CR644	152-0093-00			Tunnel		1N3716 4.7 mA	
CR655	*152-0185-00			Silicon		Replaceable by 1N4152	
CR656	*152-0185-00			Silicon		Replaceable by 1N4152	
CR657	*152-0185-00			Silicon		Replaceable by 1N4152	
CR660	*152-0185-00			Silicon		Replaceable by 1N4152	
CR662	*152-0153-00			Silicon		Tek Spec	
CR678	152-0093-00			Tunnel		1N3716 4.7 mA	
CR688	*152-0185-00			Silicon		Replaceable by 1N4152	
CR707	*152-0153-00			Silicon		Tek Spec	
CR710	*152-0185-00			Silicon		Replaceable by 1N4152	
CR765	*152-0185-00			Silicon		Replaceable by 1N4152	
CR770	*152-0185-00			Silicon		Replaceable by 1N4152	
CR785	*152-0185-00			Silicon		Replaceable by 1N4152	
CR792	*152-0153-00			Silicon		Tek Spec	
CR794	*152-0153-00			Silicon		Tek Spec	
CR795	*152-0153-00			Silicon		Tek Spec	
CR829	*152-0185-00			Silicon		Replaceable by 1N4152	
CR835	*152-0185-00			Silicon		Replaceable by 1N4152	
CR836	*152-0153-00			Silicon		Tek Spec	

A8 HORIZONTAL Circuit Board Assembly (cont)

Ckt. No.	Tektronix Part No.	Serial/Model No. Eff	Disc	Description
		Semiconductor Device, Diodes (cont)		
CR840	*152-0185-00		Silicon	Replaceable by 1N4152
CR859	*152-0185-00		Silicon	Replaceable by 1N4152
CR862	*152-0185-00		Silicon	Replaceable by 1N4152
CR864	*152-0185-00		Silicon	Replaceable by 1N4152
CR865	*152-0185-00		Silicon	Replaceable by 1N4152
CR866	*152-0153-00		Silicon	Tek Spec
CR870	*152-0153-00		Silicon	Tek Spec
CR880	*152-0153-00		Silicon	Tek Spec
CR896	*152-0185-00		Silicon	Replaceable by 1N4152
CR898	*152-0185-00		Silicon	Replaceable by 1N4152
VR605	152-0226-00		Zener	1N751A 400 mW, 5.1 V, 5%
VR635	152-0195-00		Zener	1N751A 400 mW, 5.1 V, 5%
VR657	152-0168-00		Zener	1N963A 400 mW, 12 V, 5%
VR741	152-0168-00		Zener	1N963A 400 mW, 12 V, 5%
VR809	152-0357-00		Zener	1N983B 400 mW, 82 V, 5%
VR872	152-0306-00		Zener	1N960B 400 mW, 9.1 V, 5%
VR876	152-0304-00		Zener	1N968B 400 mW, 20 V, 5%
		Transistors		
Q605A,B	*151-1049-00		Silicon	JFET TO-71 N channel, Tek Spec, dual
Q610	*151-0190-01		Silicon	NPN TO-106 Tek Spec
Q618	*151-0190-01		Silicon	NPN TO-106 Tek Spec
Q635	151-0220-00		Silicon	PNP TO-18 2N4122
Q645	151-0220-00		Silicon	PNP TO-18 2N4122
Q660	151-0220-00		Silicon	PNP TO-18 2N4122
Q665	151-0250-00		Silicon	NPN TO-104 2N5184
Q818	151-0216-00		Silicon	PNP TO-92 Replaceable by MOT MPS 6523
Q825A,B	*151-0261-00		Silicon	PNP TO-78 Tek Spec, dual
Q830A,B	*151-0232-00		Silicon	NPN TO-78 Tek Spec, dual
Q835A,B	*151-0232-00		Silicon	NPN TO-78 Tek Spec, dual
Q836A,B	*151-0261-00		Silicon	PNP TO-78 Tek Spec, dual
Q861	*151-0192-00		Silicon	NPN TO-92 Replaceable by MPS 6521
Q870	*151-0192-00		Silicon	NPN TO-92 Replaceable by MPS 6521
Q874	151-0280-00		Silicon	PNP TO-5 MM4003
Q877	151-0279-00		Silicon	NPN TO-39 SE7056
Q880	151-0164-00		Silicon	PNP TO-5 2N5447
Q884	151-0280-00		Silicon	PNP TO-5 MM4003
Q887	151-0279-00		Silicon	NPN TO-39 SE7056
Q895	*151-0192-00		Silicon	NPN TO-92 Replaceable by MPS 6521

A8 HORIZONTAL Circuit Board Assembly (cont)

Ckt. No.	Tektronix Part No.	Serial/Model No. Eff	Disc	Description		
				Resistors		
Resistors are fixed, composition, ±10% unless otherwise indicated.						
R600	322-0481-00			1 MΩ	1/4 W	Prec 1%
R602	316-0154-00			150 kΩ	1/4 W	
R603	316-0101-00			100 Ω	1/4 W	
R604	316-0151-00			150 Ω	1/4 W	
R605	321-0164-00			499 Ω	1/8 W	Prec 1%
R606	316-0470-00			47 Ω	1/4 W	
R608	316-0101-00			100 Ω	1/4 W	
R610	316-0470-00			47 Ω	1/4 W	
R612	315-0182-00			1.8 kΩ	1/4 W	5%
R613	321-0164-00			499 Ω	1/8 W	Prec 1%
R614	316-0151-00			150 Ω	1/4 W	
R615	315-0332-00			3.3 kΩ	1/4 W	5%
R616	315-0911-00			910 Ω	1/4 W	5%
R618	321-0164-00			499 Ω	1/8 W	Prec 1%
R620	321-0290-00			10.2 kΩ	1/8 W	Prec 1%
R622	321-0258-00			4.75 kΩ	1/8 W	Prec 1%
R623	315-0431-00			430 Ω	1/4 W	5%
R624	316-0101-00			100 Ω	1/4 W	
R625	315-0751-00			750 Ω	1/4 W	5%
R626	315-0112-00			1.1 kΩ	1/4 W	5%
R628	316-0392-00			3.9 kΩ	1/4 W	
R629	311-0644-00			20 kΩ, Var		
R634	316-0222-00			2.2 kΩ	1/4 W	
R635	316-0222-00			2.2 kΩ	1/4 W	
R636	301-0391-00			390 Ω	1/2 W	5%
R637	316-0272-00			2.7 kΩ	1/4 W	
R638	316-0222-00			2.2 kΩ	1/4 W	
R640	315-0472-00			4.7 kΩ	1/4 W	5%
R644	315-0560-00			56 Ω	1/4 W	5%
R645	315-0472-00			4.7 kΩ	1/4 W	5%
R646	315-0300-00			30 Ω	1/4 W	5%
R650	316-0101-00			100 Ω	1/4 W	
R651	315-0513-00			51 kΩ	1/4 W	5%
R652	315-0112-00			1.1 kΩ	1/4 W	5%
R654	321-0085-00			75 Ω	1/8 W	Prec 1%
R655	316-0101-00			100 Ω	1/4 W	
R656	321-0278-00			7.68 kΩ	1/8 W	Prec 1%
R657	315-0151-00			150 Ω	1/4 W	5%
R660	316-0153-00			15 kΩ	1/4 W	
R662	316-0392-00			3.9 kΩ	1/4 W	

A8 HORIZONTAL Circuit Board Assembly (cont)

Ckt. No.	Tektronix Part No.	Serial/Model No. Eff	Disc	Description		
				Resistors (cont)		
R663	315-0101-00			100 Ω	1/4 W	5%
R665	316-0104-00			100 kΩ	1/4 W	
R666	316-0153-00			15 kΩ	1/4 W	
R667	321-0332-00			28 kΩ	1/8 W Prec	1%
R668	321-0303-00			14 kΩ	1/8 W Prec	1%
R669	321-0347-00			40.2 kΩ	1/8 W Prec	1%
R670	321-0291-00			10.5 kΩ	1/8 W Prec	1%
R672	321-0332-00			28 kΩ	1/8 W Prec	1%
R675	321-0247-00			3.65 kΩ	1/8 W Prec	1%
R678	321-0162-00			475 Ω	1/8 W Prec	1%
R680	316-0101-00			100 Ω	1/4 W	
R682	321-0245-00			3.48 kΩ	1/8 W Prec	1%
R684	321-0270-00			6.34 kΩ	1/8 W Prec	1%
R685	321-0085-00			75 Ω	1/8 W Prec	1%
R686	321-0164-00			499 Ω	1/8 W Prec	1%
R687	321-0262-00			5.23 kΩ	1/8 W Prec	1%
R688	316-0101-00			100 Ω	1/4 W	
R690	316-0101-00			100 Ω	1/4 W	
R692	321-0232-00			2.55 kΩ	1/8 W Prec	1%
R700	316-0102-00			1 kΩ	1/4 W	
R701	316-0104-00			100 kΩ	1/4 W	
R702	316-0101-00			100 Ω	1/4 W	
R703	311-0644-00			20 kΩ, Var		
R704	316-0223-00			22 kΩ	1/4 W	
R705	321-0287-00			9.53 kΩ	1/8 W Prec	1%
R706	321-0264-00			5.49 kΩ	1/8 W Prec	1%
R707	316-0101-00			100 Ω	1/4 W	
R708	316-0561-00			560 Ω	1/4 W	
R709	316-0101-00			100 Ω	1/4 W	
R710	316-0220-00			22 Ω	1/4 W	
R711	315-0110-00			11 Ω	1/4 W	5%
R712	321-0934-00			19.19 kΩ	1/8 W Prec	1/2%
R714	321-0418-02			221 kΩ	1/8 W Prec	1/2%
R715	322-0510-02			2 MΩ	1/4 W Prec	1/2%
R718	321-0154-00			392 Ω	1/8 W Prec	1%
R719	321-0249-00			3.83 kΩ	1/8 W Prec	1%
R720	321-0149-00			348 Ω	1/8 W Prec	1%
R722	321-0175-00			649 Ω	1/8 W Prec	1%
R723	321-0155-02			420 Ω	1/8 W Prec	1/2%
R724	321-0228-00			2.32 kΩ	1/8 W Prec	1%

A8 HORIZONTAL Circuit Board Assembly (cont)

Ckt. No.	Tektronix Part No.	Serial/Model No. Eff	Disc	Description		
				Resistors (cont)		
R725	321-0172-02			604 Ω	1/8 W	Prec 1/2 %
R726	321-0193-02			1 kΩ	1/8 W	Prec 1/2 %
R727	311-0607-00			10 kΩ, Var		
R728	321-0193-00			1 kΩ	1/8 W	Prec 1%
R729	316-0123-00			12 kΩ	1/4 W	
R740	321-0209-00			1.47 kΩ	1/8 W	Prec 1%
R741	316-0151-00			150 Ω	1/4 W	
R742	316-0470-00			47 Ω	1/4 W	
R744	315-0102-00			1 kΩ	1/4 W	5%
R745	315-0332-00			3.3 kΩ	1/4 W	5%
R746	321-0300-00			13 kΩ	1/8 W	Prec 1%
R748	315-0512-00			5.1 kΩ	1/4 W	5%
R752	315-0113-00			11 kΩ	1/4 W	5%
R754	315-0392-00			3.9 kΩ	1/4 W	5%
R755	315-0242-00			2.4 kΩ	1/4 W	5%
R756	315-0242-00			2.4 kΩ	1/4 W	5%
R760	321-0222-00			2 kΩ	1/8 W	Prec 1%
R761	321-0114-00			150 Ω	1/8 W	Prec 1%
R762	321-0362-00			57.6 kΩ	1/8 W	Prec 1%
R763	321-0191-00			953 Ω	1/8 W	Prec 1%
R764	321-0280-00			8.06 kΩ	1/8 W	Prec 1%
R765	321-0292-00			10.7 kΩ	1/8 W	Prec 1%
R766	321-0247-00			3.65 kΩ	1/8 W	Prec 1%
R768	321-0280-00			8.06 kΩ	1/8 W	Prec 1%
R770	316-0183-00			18 kΩ	1/4 W	
R772	321-0284-00			8.87 kΩ	1/8 W	Prec 1%
R774	321-0268-00			6.04 kΩ	1/8 W	Prec 1%
R775	316-0101-00			100 Ω	1/4 W	
R778	315-0204-00			200 kΩ	1/4 W	5%
R780	315-0103-00			10 kΩ	1/4 W	5%
R782	316-0336-00			33 MΩ	1/4 W	
R783	316-0220-00			22 Ω	1/4 W	
R784	316-0102-00			1 kΩ	1/4 W	
R785	321-0193-00			1 kΩ	1/8 W	Prec 1%
R786	321-0303-00			14 kΩ	1/8 W	Prec 1%
R790	315-0820-00			82 Ω	1/4 W	5%
R791	315-0392-00			3.9 kΩ	1/4 W	5%
R792	321-0277-00			7.5 kΩ	1/8 W	Prec 1%
R794	321-0222-00			2 kΩ	1/8 W	Prec 1%
R795	321-0277-00			7.5 kΩ	1/8 W	Prec 1%

A8 HORIZONTAL Circuit Board Assembly (cont)

Ckt. No.	Tektronix Part No.	Serial/Model No. Eff	Disc	Description			
				Resistors (cont)			
R796	321-0302-00			13.7 kΩ	1/8 W	Prec	1%
R801	315-0162-00			1.6 kΩ	1/4 W		5%
R803	321-0255-00			4.42 kΩ	1/8 W	Prec	1%
R804	321-0364-00			60.4 kΩ	1/8 W	Prec	1%
R805	315-0332-00			3.3 kΩ	1/4 W		5%
R806	316-0563-00			56 kΩ	1/4 W		
R807	321-0290-00			10.2 kΩ	1/8 W	Prec	1%
R808	321-0364-00			60.4 kΩ	1/8 W	Prec	1%
R809	321-0434-00			324 kΩ	1/8 W	Prec	1%
R810	321-0336-00			30.9 kΩ	1/8 W	Prec	1%
R811	321-0452-00			499 kΩ	1/8 W	Prec	1%
R812	321-0259-00			4.87 kΩ	1/8 W	Prec	1%
R814	321-0208-00			1.43 kΩ	1/8 W	Prec	1%
R815	321-0214-00			1.65 kΩ	1/8 W	Prec	1%
R816	321-0225-00			2.15 kΩ	1/8 W	Prec	1%
R817	311-0644-00			20 kΩ, Var			
R818	321-0155-00			402 Ω	1/8 W	Prec	1%
R819	321-0296-00			11.8 kΩ	1/8 W	Prec	1%
R825	321-0214-00			1.65 kΩ	1/8 W	Prec	1%
R826	321-0225-00			2.15 kΩ	1/8 W	Prec	1%
R827	321-0286-00			9.31 kΩ	1/8 W	Prec	1%
R829	321-0222-00			2 kΩ	1/8 W	Prec	1%
R830	316-0470-00			47 Ω	1/4 W		
R832	316-0472-00			4.7 kΩ	1/4 W		
R835	321-0292-00			10.7 kΩ	1/8 W	Prec	1%
R836	321-0247-00			3.65 kΩ	1/8 W	Prec	1%
R838	321-0204-00			1.3 kΩ	1/8 W	Prec	1%
R839	321-0029-00			19.6 Ω	1/8 W	Prec	1%
R840	321-0193-07			1 kΩ	1/8 W	Prec	1/10%
R841	321-0175-00			649 Ω	1/8 W	Prec	1%
R842	321-0161-00			464 Ω	1/8 W	Prec	1%
R844	321-0117-00			162 Ω	1/8 W	Prec	1%
R846	321-0122-00			182 Ω	1/8 W	Prec	1%
R848	321-0061-00			42.2 Ω	1/8 W	Prec	1%
R850	321-0034-00			22.1 Ω	1/8 W	Prec	1%
R852	321-0003-00			10.5 Ω	1/8 W	Prec	1%
R858	321-0029-00			19.6 Ω	1/8 W	Prec	1%
R859	321-0193-07			1 kΩ	1/8 W	Prec	1/10%
R860	316-0470-00			47 Ω	1/4 W		
R861	321-0111-00			140 Ω	1/8 W	Prec	1%

A8 HORIZONTAL Circuit Board Assembly (cont)

Ckt. No.	Tektronix Part No.	Serial/Model No. Eff	Serial/Model No. Disc	Description		
			Resistors (cont)			
R862	321-0186-00			845 Ω	1/8 W	Prec 1%
R863	321-0273-00			6.81 kΩ	1/8 W	Prec 1%
R864	315-0302-00			3 kΩ	1/4 W	5%
R865	321-0292-00			10.7 kΩ	1/8 W	Prec 1%
R866	321-0247-00			3.65 kΩ	1/8 W	Prec 1%
R867	316-0472-00			4.7 kΩ	1/4 W	
R868	311-0635-00			1 kΩ, Var		
R870	323-0139-00			274 Ω	1/2 W	Prec 1%
R871	324-0356-00			49.9 kΩ	1 W	Prec 1%
R874	303-0563-00			56 kΩ	1 W	5%
R875	321-0244-00			3.4 kΩ	1/8 W	Prec 1%
R876	316-0471-00			470 Ω	1/4 W	
R877	323-0188-00			887 Ω	1/2 W	Prec 1%
R879	316-0101-00			100 Ω	1/4 W	
R881	324-0356-00			49.9 kΩ	1 W	Prec 1%
R882	321-0143-00			301 Ω	1/8 W	Prec 1%
R884	303-0563-00			56 kΩ	1 W	5%
R885	321-0244-00			3.4 kΩ	1/8 W	Prec 1%
R886	316-0471-00			470 Ω	1/4 W	
R887	323-0188-00			887 Ω	1/2 W	Prec 1%
R888	316-0104-00			100 kΩ	1/4 W	
R889	316-0101-00			100 Ω	1/4 W	
R890	321-0256-00			4.53 kΩ	1/8 W	Prec 1%
R892	321-0236-00			2.8 kΩ	1/8 W	Prec 1%
R896	323-0118-00			165 Ω	1/2 W	Prec 1%
R898	323-0148-00			340 Ω	1/2 W	Prec 1%
			Switch			
	Wired or Unwired					
S700[1]	*105-0262-00			Cam	TIME/DIV	
			Transformer			
T645	*120-0724-00			Toroid, 2 windings		
			Integrated Circuits			
U650	156-0048-00			Linear		
U680	156-0048-00			Linear		
U700	*155-0028-01			Monolithic, Miller integrator		
U760	156-0048-00			Linear		

[1]See Mechanical Parts List for replacement parts.

A9 PRIMARY POWER SUPPLY Circuit Board Assembly

Ckt. No.	Tektronix Part No.	Serial/Model No. Eff	Disc	Description			
	*670-1350-00			Complete Board			
				Capacitors			
Tolerance ±20% unless otherwise indicated.							
C1020	290-0164-00			1 μF	Elect.	150 V	
C1024	283-0203-00			0.47 μF	Cer	50 V	
C1034	290-0194-00			10 μF	Elect.	100 V	
C1036	283-0002-00			0.01 μF	Cer	500 V	
C1038	283-0002-00			0.01 μF	Cer	500 V	
C1044	281-0523-00			100 pF	Cer	350 V	
C1046	283-0646-00			170 pF	Mica	100 V	1%
C1071	283-0142-00			0.0027 μF	Cer	200 V	5%
C1076	283-0142-00			0.0027 μF	Cer	200 V	5%
C1081	281-0536-00			1000 pF	Cer	500 V	10%
C1090	281-0546-00			330 pF	Cer	500 V	10%
C1093	281-0543-00			270 pF	Cer	500 V	10%
C1095	290-0167-00			10 μF	Elect.	15 V	
				Semiconductor Device, Diodes			
CR1032	*152-0061-00			Silicon	Tek Spec		
CR1040	*152-0185-00			Silicon	Replaceable by 1N4152		
CR1056	*152-0185-00			Silicon	Replaceable by 1N4152		
CR1058	*152-0185-00			Silicon	Replaceable by 1N4152		
CR1060	*152-0185-00			Silicon	Replaceable by 1N4152		
CR1065	*152-0185-00			Silicon	Replaceable by 1N4152		
CR1066	152-0333-00			Silicon	High speed and conductance		
CR1068	152-0333-00			Silicon	High speed and conductance		
CR1070	*152-0185-00			Silicon	Replaceable by 1N4152		
CR1071	*152-0185-00			Silicon	Replaceable by 1N4152		
CR1075	*152-0061-00			Silicon	Tek Spec		
CR1077	*152-0185-00			Silicon	Replaceable by 1N4152		
CR1078	152-0333-00			Silicon	High speed and conductance		
CR1079	152-0333-00			Silicon	High speed and conductance		
CR1080	152-0333-00			Silicon	High speed and conductance		
CR1081	*152-0185-00			Silicon	Replaceable by 1N4152		
CR1082	*152-0185-00			Silicon	Replaceable by 1N4152		
CR1085	*152-0061-00			Silicon	Tek Spec		
CR1090	*152-0185-00			Silicon	Replaceable by 1N4152		
CR1091	*152-0185-00			Silicon	Replaceable by 1N4152		
CR1092	*152-0061-00			Silicon	Tek Spec		
CR1093	*152-0185-00			Silicon	Replaceable by 1N4152		
CR1094	152-0333-00			Silicon	High speed and conductance		
CR1095	152-0333-00			Silicon	High speed and conductance		
CR1096	152-0333-00			Silicon	High speed and conductance		

A9 PRIMARY POWER SUPPLY Circuit Board Assembly (cont)

Ckt. No.	Tektronix Part No.	Serial/Model No. Eff	Disc	Description
		Semiconductor Device, Diodes (cont)		
CR1097	152-0333-00			Silicon High speed and conductance
CR1098	152-0333-00			Silicon High speed and conductance
CR1099	152-0333-00			Silicon High speed and conductance
VR1020	152-0427-00			Zener 1N985B 400 mW, 100 V, 5%
VR1025	152-0255-00			Zener 1N978B 400 mW, 51 V, 5%
VR1047	152-0283-00			Zener 1N976B 400 mW, 43 V, 5%
VR1052	152-0282-00			Zener 1N972A 400 mW, 30 V, 5%
VR1061	152-0280-00			Zener 1N753A 400 mW, 6.2 V, 5%
VR1072	152-0304-00			Zener 1N968B 400 mW, 20 V, 5%
VR1080	152-0279-00			Zener 1N751A 400 mW, 5.1 V, 5%
VR1094	152-0255-00			Zener 1N978B 400 mW, 51 V, 5%
		Bulbs		
DS1020	150-0035-00			Neon, A1D-T, 0.3 mA
DS1024	150-0035-00			Neon, A1D-T, 0.3 mA
		Transistors		
Q1025	151-0250-00			Silicon NPN TO-104 2N5184
Q1030	*151-0297-00			Silicon NPN TO-39 High voltage, Tek Spec
Q1032	*151-0297-00			Silicon NPN TO-39 High voltage, Tek Spec
Q1040	*151-0228-00			Silicon PNP TO-5 Tek Spec
Q1045	*151-0228-00			Silicon PNP TO-5 Tek Spec
Q1050	151-0508-00			Silicon PNPN TO-98 D13T1
Q1064	151-0279-00			Silicon NPN TO-39 SE 7056
Q1065	151-0164-00			Silicon PNP TO-5 2N5447
Q1075	151-0508-00			Silicon PNPN TO-98 D13T1
Q1078	151-0290-00			Silicon NPN TO-5 2N4895
Q1090	151-0188-00			Silicon PNP TO-92 2N3906
Q1091	151-0302-00			Silicon NPN TO-18 2N2222A
Q1094	151-0290-00			Silicon NPN TO-5 2N4895
		Resistors		
Resistors are fixed, composition, ±10% unless otherwise indicated.				
R1020	316-0226-00			22 MΩ ¼ W
R1022	316-0474-00			470 kΩ ¼ W
R1024	316-0225-00			2.2 MΩ ¼ W
R1025	316-0104-00			100 kΩ ¼ W
R1026	316-0101-00			100 Ω ¼ W
R1028	316-0105-00			1 MΩ ¼ W
R1030	316-0393-00			39 kΩ ¼ W
R1032	306-0182-00			1.8 kΩ 2 W
R1034	303-0103-00			10 kΩ 1 W 5%
R1036	316-0101-00	B010100	B019999	100 Ω ¼ W
R1036	316-0221-00	B020000		220 Ω ¼ W
R1038	316-0154-00	XB020000		150 kΩ ¼ W

A9 PRIMARY POWER SUPPLY Circuit Board Assembly (cont)

Ckt. No.	Tektronix Part No.	Serial/Model No. Eff	Disc	Description	
				Resistors (cont)	
R1040	316-0102-00			1 kΩ	¼ W
R1042	316-0102-00			1 kΩ	¼ W
R1044	316-0103-00			10 kΩ	¼ W
R1045	316-0104-00			100 kΩ	¼ W
R1046	316-0684-00			680 kΩ	¼ W
R1047	316-0103-00			10 kΩ	¼ W
R1050	316-0102-00			1 kΩ	¼ W
R1052	316-0102-00			1 kΩ	¼ W
R1054	316-0103-00			10 kΩ	¼ W
R1060	316-0391-00			390 Ω	¼ W
R1061	316-0102-00			1 kΩ	¼ W
R1062	316-0222-00			2.2 kΩ	¼ W
R1064	316-0103-00			10 kΩ	¼ W
R1065	316-0151-00			150 Ω	¼ W
R1068	307-0114-00			6.2 Ω	¼ W 5%
R1071	316-0331-00			330 Ω	¼ W
R1072	316-0153-00			15 kΩ	¼ W
R1074	311-0609-00			2 kΩ, Var	
R1075	316-0681-00			680 Ω	¼ W
R1076	316-0102-00			1 kΩ	¼ W
R1077	316-0182-00			1.8 kΩ	¼ W
R1078	316-0472-00			4.7 kΩ	¼ W
R1080	316-0102-00			1 kΩ	¼ W
R1081	316-0101-00			100 Ω	¼ W
R1090	316-0472-00			4.7 kΩ	¼ W
R1091	316-0221-00			220 Ω	¼ W
R1092	316-0102-00			1 kΩ	¼ W
R1093	316-0273-00			27 kΩ	¼ W
R1094	316-0101-00			100 Ω	¼ W
R1095	316-0222-00			2.2 kΩ	¼ W
				Transformers	
T1036	*120-0722-00			Toroid, 5 turns, bifilar	
T1064	*120-0718-00			Pot core	
T1078	*120-0720-00			Pot core	
T1080	*120-0717-00			Pot core	

A10 SECONDARY POWER SUPPLY Circuit Board Assembly

Ckt. No.	Tektronix Part No.	Serial/Model No. Eff	Disc	Description		
	*670-1349-03			Complete Board		
				Capacitors		
Tolerance ±20% unless otherwise indicated.						
C1100	290-0516-00			15 μF	Elect.	300 V +50%—10%
C1101	283-0008-00			0.1 μF	Cer	500 V
C1102	290-0200-00			12 μF	Elect.	150 V
C1103	290-0200-00			12 μF	Elect.	150 V
C1104	290-0513-00			510 μF	Elect.	25 V +75%—10%
C1105	290-0425-00			100 μF	Elect.	20 V
C1106	290-0513-00			510 μF	Elect.	25 V +75%—10%
C1107	290-0425-00			100 μF	Elect.	20 V
C1108	290-0410-00			15 μF	Elect.	100 V +50%—10%
C1110	281-0525-00			470 pF	Cer	500 V
C1115	283-0192-00			0.47 μF	Cer	3 V +80%—20%
C1126	283-0000-00			0.001 μF	Cer	500 V
C1130	283-0111-00			0.1 μF	Cer	50 V
C1136	283-0054-00			150 pF	Cer	200 V 5%
				Semiconductor Device, Diodes		
CR1016	152-0497-00			Silicon		Rectifier Bridge, 600 V, 1.5 A
CR1100	152-0331-00			Silicon		Fast recovery 800 V, 25 mA
CR1102	152-0413-00			Silicon		Rectifier, fast recovery, 400 V, 0.75 A
CR1104	152-0412-00			Silicon		Rectifier, fast recovery, 50 V, 3A
CR1106	152-0412-00			Silicon		Rectifier, fast recovery, 50 V, 3A
CR1108	152-0413-00			Silicon		Rectifier, fast recovery, 400 V, 0.75 A
CR1110	*152-0185-00			Silicon		Replaceable by 1N4152
CR1132	*152-0185-00			Silicon		Replaceable by 1N4152
CR1138	*152-0185-00			Silicon		Replaceable by 1N4152
CR1150	*152-0185-00			Silicon		Replaceable by 1N4152
VR1110	152-0195-00			Zener		1N751A 400 mW, 5.1 V, 5%
VR1140	152-0306-00			Zener		1N960B 400 mW, 9.1 V, 5%
				Inductors		
L1102	*108-0646-00			80 μH		
L1104	*108-0646-00			80 μH		
L1105	*108-0170-01			0.5 μH		
L1106	*108-0646-00			80 μH		
				Transistors		
Q1138	151-0508-00			Silicon	PNPN	TO-98 D13T1
Q1150	*151-0190-01			Silicon	NPN	TO-106 Tek Spec

A10 SECONDARY POWER SUPPLY Circuit Board Assembly (cont)

Ckt. No.	Tektronix Part No.	Serial/Model No. Eff	Disc	Description		
				Resistors		
Resistors are fixed, composition, ±10% unless otherwise indicated.						
R1101	316-0101-00			100 Ω	1/4 W	
R1110	316-0221-00			220 Ω	1/4 W	
R1112	316-0104-00			100 kΩ	1/4 W	
R1114	316-0823-00			82 kΩ	1/4 W	
R1115	316-0102-00			1 kΩ	1/4 W	
R1120	321-0273-00			6.81 kΩ	1/8 W	Prec 1%
R1122	311-0635-00			1 kΩ, Var		
R1124	321-0265-00			5.62 kΩ	1/8 W	Prec 1%
R1132	316-0474-00			470 kΩ	1/4 W	
R1136	316-0102-00			1 kΩ	1/4 W	
R1137	316-0102-00			1 kΩ	1/4 W	
R1138	316-0103-00			10 kΩ	1/4 W	
R1139	316-0471-00			470 Ω	1/4 W	
R1142	316-0333-00			33 kΩ	1/4 W	
R1150	316-0152-00			1.5 kΩ	1/4 W	
				Switch		
	Wired or Unwired					
S1010	260-0834-00			Push-pull	POWER	
				Transformers		
T1100	*120-0723-00			Toroid, 7 windings		
T1115	*120-0716-00			Line trigger		
T1150	*120-0719-00			Pot core		
				Integrated Circuit		
U1130	156-0053-00			Volt. reg, replaceable by Fairchild μA723C		

TRANSFORMER Assembly

	*120-0715-00			Complete Transformer Assembly includes:		
A11				PRIMARY TRANSFORMER Circuit Board Assembly		
A12				SECONDARY TRANSFORMER Circuit Board Assembly		

TRANSFORMER Assembly (cont)

Ckt. No.	Tektronix Part No.	Serial/Model No. Eff	Disc	Description
		Capacitors		
Tolerance ±20% unless otherwise indicated.				
C1180	283-0068-00		0.01 μF	Cer 500 V
C1181	283-0021-00		0.001 μF	Cer 5000 V
C1182	283-0068-00		0.01 μF	Cer 500 V
C1184	283-0068-00		0.01 μF	Cer 500 V
C1186	283-0068-00		0.01 μF	Cer 500 V
C1188	283-0068-00		0.01 μF	Cer 500 V
C1190	283-0068-00		0.01 μF	Cer 500 V
C1192	283-0068-00		0.01 μF	Cer 500 V
C1194	283-0068-00		0.01 μF	Cer 500 V
C1196	283-0068-00		0.01 μF	Cer 500 V
C1198	283-0068-00		0.01 μF	Cer 500 V
C1199	290-0167-00		10 μF	Elect. 15 V
		Semiconductor Device, Diodes		
CR1180	152-0170-00		Silicon	1N4441
CR1182	152-0170-00		Silicon	1N4441
CR1184	152-0170-00		Silicon	1N4441
CR1186	152-0170-00		Silicon	1N4441
CR1188	152-0170-00		Silicon	1N4441
CR1190	152-0170-00		Silicon	1N4441
CR1192	152-0170-00		Silicon	1N4441
CR1194	152-0170-00		Silicon	1N4441
CR1196	152-0170-00		Silicon	1N4441
CR1198	152-0170-00		Silicon	1N4441
CR1199	152-0413-00		Silicon	Rectifier, fast recovery, 400 V, 0.75A
		Resistors		
Resistors are fixed, composition, ±10% unless otherwise indicated.				
R1180	316-0103-00		10 kΩ	¼ W
R1198	316-0103-00		10 kΩ	¼ W
		Transformer		
T1085[1]				

[1]Not individually replaceable.

A13 LINE FILTER Assembly

Ckt. No.	Tektronix Part No.	Serial/Model No. Eff	Disc	Description		
	*119-0295-00			Complete Line Filter Assembly		
				Capacitors		
Tolerance ±20% unless otherwise indicated.						
C1004	283-0263-00			0.0022 μF	Cer	3000 V
C1006	283-0263-00			0.0022 μF	Cer	3000 V
				Line Filter Assembly		
FL1010[1]				Line Filter Assembly		
				Inductor		
L1004	*108-0660-00			Two 240 μH toroidal inductors, potted		
				Resistor		
Resistors are fixed, composition, ±10% unless otherwise indicated.						
R1004	315-0102-00	B010100	B019999	1 kΩ	1/4 W	5%
R1004	316-0472-00	B020000		4.7 kΩ	1/4 W	
				Transformer		
T1004	*120-0725-00			Common Mode Rejection		

A14 Z AXIS Circuit Board Assembly

	*670-1332-00			Complete Board		
				Capacitors		
Tolerance ±20% unless otherwise indicated.						
C811	283-0004-00			0.02 μF	Cer	150 V
C902	283-0594-00			0.001 μF	Mica	100 V 1%
C906	*285-0758-01			0.05 μF	PTM	400 V 2%
C919	290-0135-00			15 μF	Elect.	20 V
C921	283-0000-00			.001 μF	Cer	500 V
C922	281-0523-00			100 pF	Cer	350 V
C923	281-0628-00			15 pF	Cer	600 V 5%
C924	283-0021-00			0.001 μF	Cer	5000 V
C925	283-0021-00			0.001 μF	Cer	5000 V
C926	283-0002-00			0.01 μF	Cer	500 V

[1]Not individually replaceable.

A14 Z AXIS Circuit Board Assembly (cont)

Ckt. No.	Tektronix Part No.	Serial/Model No. Eff	Disc	Description			
				Capacitors (cont)			
C928	283-0068-00			0.01 μF	Cer	500 V	
C932	281-0525-00			470 pF	Cer	500 V	
C934	283-0162-00			0.01 μF	Cer	5000 V	+80%—20%
C940	283-0002-00			0.01 μF	Cer	500 V	
C942	283-0083-00			0.0047 μF	Cer	500 V	5%
C945	283-0002-00			0.01 μF	Cer	500 V	
C952	281-0599-00			1 pF	Cer	200 V	±0.25 pF
C953	281-0064-00			0.25-1.5 pF, Var	Plastic		
C957	281-0537-00			0.68 pF	Cer	500 V	
C960	283-0032-00			470 pF	Cer	500 V	5%
C961	283-0077-00			330 pF	Cer	500 V	5%
C968	283-0000-00			0.001 μF	Cer	500 V	
C980	283-0068-00			0.01 μF	Cer	500 V	
C990	283-0162-00			0.01 μF	Cer	5000 V	+80%—20%
C996	290-0523-00			2.2 μF	Elect.	20 V	
C998	290-0523-00			2.2 μF	Elect.	20 V	
				Semiconductor Device, Diodes			
CR924	*152-0242-00			Silicon	Selected from 1N486A		
CR925	*152-0242-00			Silicon	Selected from 1N486A		
CR926	*152-0242-00			Silicon	Selected from 1N486A		
CR928	*152-0242-00			Silicon	Selected from 1N486A		
CR931	*152-0242-00			Silicon	Selected from 1N486A		
CR935	*152-0242-00			Silicon	Selected from 1N486A		
CR940	152-0333-00			Silicon	High speed and conductance		
CR953	*152-0242-00			Silicon	Selected from 1N486A		
CR954	*152-0185-00			Silicon	Replaceable by 1N4152		
CR955	*152-0185-00			Silicon	Replaceable by 1N4152		
CR962	*152-0185-00			Silicon	Replaceable by 1N4152		
CR982	152-0333-00			Silicon	High speed and conductance		
CR983	152-0333-00			Silicon	High speed and conductance		
VR935	152-0241-00			Zener	1N973B	400 mW, 33 V, 5%	
VR937	152-0241-00			Zener	1N973B	400 mW, 33 V, 5%	
VR940	152-0195-00			Zener	1N751A	400 mW, 5.1 V, 5%	
VR944	152-0255-00			Zener	1N978B	400 mW, 51 V, 5%	
VR980	152-0427-00			Zener	1N985B	400 mW, 100 V, 5%	
VR981	152-0283-00			Zener	1N976B	400 mW, 43 V, 5%	
VR985	152-0247-00			Zener	1N989B	400 mW, 150 V, 5%	
VR986	152-0247-00			Zener	1N989B	400 mW, 150 V, 5%	
VR987	152-0247-00			Zener	1N989B	400 mW, 150 V, 5%	
VR988	152-0247-00			Zener	1N989B	400 mW, 150 V, 5%	
VR989	152-0247-00			Zener	1N989B	400 mW, 150 V, 5%	
VR990	152-0247-00			Zener	1N989B	400 mW, 150 V, 5%	
VR994	152-0285-00			Zener	1N980B	400 mW, 62 V, 5%	

A14 Z AXIS Circuit Board Assembly (cont)

Ckt. No.	Tektronix Part No.	Serial/Model No. Eff	Disc	Description
				Transistors
Q905	151-0273-00			Silicon NPN TO-98 2N5249
Q910	151-0273-00			Silicon NPN TO-98 2N5249
Q915	151-0220-00			Silicon PNP TO-18 2N4122
Q924	151-0250-00			Silicon NPN TO-106 2N5184
Q925	*151-0228-00			Silicon PNP TO-5 Tek Spec
Q940	151-0280-00			Silicon PNP TO-5 MM4003
Q950	*151-0124-00			Silicon NPN TO-5 Selected from 2N3119
Q954	*151-0190-01			Silicon NPN TO-106 Tek Spec
Q955	151-0220-00			Silicon PNP TO-18 2N4122
Q989	151-0279-00			Silicon NPN TO-39 SE 7056
Q990	151-0279-00			Silicon NPN TO-39 SE 7056
Q995	151-0279-00			Silicon NPN TO-39 SE 7056
				Resistors
Resistors are fixed, composition, ±10% unless otherwise indicated.				
R900	321-0298-00			12.4 kΩ 1/8 W Prec 1%
R902	321-0304-00			14.3 kΩ 1/8 W Prec 1%
R904	311-1225-00			1 kΩ, Var
R905	321-0268-09			6.04 kΩ 1/8 W Prec 1%
R906	321-0357-00			51.1 kΩ 1/8 W Prec 1%
R908	321-0365-09			61.9 kΩ 1/8 W Prec 1%
R910	321-0358-00			52.3 kΩ 1/8 W Prec 1%
R911	315-0202-00			2 kΩ 1/4 W 5%
R912	316-0470-00			47 Ω 1/4 W
R915	311-1226-00			2.5 kΩ, Var
R916	322-0301-00			13.3 kΩ 1/4 W Prec 1%
R918	321-0172-00			604 Ω 1/8 W Prec 1%
R919	316-0270-00			27 Ω 1/4 W
R920	316-0103-00			10 kΩ 1/4 W
R921	316-0332-00			3.3 kΩ 1/4 W
R922	316-0471-00			470 Ω 1/4 W
R923	316-0474-00			470 kΩ 1/4 W
R924	316-0102-00			1 kΩ 1/4 W
R925	316-0471-00			470 Ω 1/4 W
R926	316-0101-00			100 Ω 1/4 W
R927	316-0471-00			470 Ω 1/4 W
R928	316-0395-00			3.9 MΩ 1/4 W
R930	316-0473-00			47 kΩ 1/4 W
R931	316-0222-00			2.2 kΩ 1/4 W
R932	316-0221-00			220 Ω 1/4 W

A14 Z AXIS Circuit Board Assembly (cont)

Ckt. No.	Tektronix Part No.	Serial/Model No. Eff	Disc	Description		
				Resistors (cont)		
R934	316-0470-00			47 Ω	1/4 W	
R935	316-0103-00			10 kΩ	1/4 W	
R936	303-0330-00			33 Ω	1 W	5%
R937	316-0104-00			100 kΩ	1/4 W	
R940	315-0114-00			110 kΩ	1/4 W	5%
R941	316-0101-00			100 Ω	1/4 W	
R942	315-0911-00			910 Ω	1/4 W	5%
R943	316-0470-00			47 Ω	1/4 W	
R945	315-0512-00			5.1 kΩ	1/4 W	5%
R946	316-0103-00			10 kΩ	1/4 W	
R948	316-0101-00			100 Ω	1/4 W	
R949	316-0220-00			22 Ω	1/4 W	
R953	316-0101-00			100 Ω	1/4 W	
R954	316-0102-00			1 kΩ	1/4 W	
R955	316-0220-00			22 Ω	1/4 W	
R956	316-0392-00			3.9 kΩ	1/4 W	
R958	323-0363-00			59 kΩ	1/2 W Prec	1%
R960	315-0566-00			56 MΩ	1/4 W	5%
R961	316-0102-00			1 kΩ	1/4 W	
R962A	*307-0274-00			39.3 MΩ	Thick film	
R962B				140 kΩ		
R962C				4.9 MΩ		
R962D				29.1 MΩ		
R962E				600 kΩ		
R963	311-1230-00			20 kΩ, Var		
R967	311-1251-00			200 kΩ, Var		
R968	311-1257-00			5 MΩ, Var		
R972	321-0382-00			93.1 kΩ	1/8 W Prec	1%
R973	321-0266-00			5.76 kΩ	1/8 W Prec	1%
R974	321-0322-00			22.1 kΩ	1/8 W Prec	1%
R975	321-0236-00			2.8 kΩ	1/8 W Prec	1%
R976	316-0390-00			39 Ω	1/4 W	
R978	321-0210-00			1.5 kΩ	1/8 W Prec	1%
R979	321-0250-00			3.92 kΩ	1/8 W Prec	1%
R980	311-1254-00			1 MΩ, Var		
R981	316-0472-00			4.7 kΩ	1/4 W	
R983	316-0333-00			33 kΩ	1/4 W	
R986	316-0106-00			10 MΩ	1/4 W	
R987	316-0106-00			10 MΩ	1/4 W	
R988	316-0103-00			10 kΩ	1/4 W	
R990	316-0226-00			22 MΩ	1/4 W	
R994	316-0223-00			22 kΩ	1/4 W	
R995	316-0475-00			4.7 MΩ	1/4 W	
R996	316-0220-00			22 Ω	1/4 W	

A14 Z AXIS Circuit Board Assembly (cont)

Ckt. No.	Tektronix Part No.	Serial/Model No. Eff	Disc	Description
				Transformer
T920	*120-0721-00			Pot core
				Integrated Circuit
U940	*155-0051-00			Monolithic, Z-axis & HV regulator

A15 UPPER STORAGE SWITCH Circuit Board Assembly

*670-1524-00 Complete Board

Switches

Wired or Unwired

S90A[1], S90B[1], S90C[1]	*670-1524-00		Push-push	UPPER SCREEN

A16 LOWER STORAGE SWITCH Circuit Board Assembly

*670-1525-00 Complete Board

Switches

Wired or Unwired

S92A[1], S92B[1], S92C[1]	*670-1525-00		Push-push	LOWER SCREEN

A17 STORAGE Circuit Board Assembly

*670-1523-00 Complete Board

Capacitors

Tolerance ±20% unless otherwise indicated.

C1200	283-0003-00	0.01 μF	Cer	150 V	
C1202	290-0529-00	47 μF	Elect.	20 V	
C1206	283-0000-00	0.001 μF	Cer	500 V	
C1208	283-0000-00	0.001 μF	Cer	500 V	
C1214	283-0167-00	0.1 μF	Cer	200 V	10%

[1]See Mechanical Parts List for replacement parts.

A17 STORAGE Circuit Board Assembly (cont)

Ckt. No.	Tektronix Part No.	Serial/Model No. Eff	Disc	Description			
				Capacitors (cont)			
C1219	290-0135-00			15 μF	Elect.	20 V	
C1235	290-0303-00			5 μF	Elect.	300 V	+75%—10%
C1240	281-0523-00			100 pF	Cer	350 V	
C1246	283-0187-00			0.047 μF	Cer	400 V	10%
C1250	283-0003-00			0.01 μF	Cer	150 V	
C1256	283-0000-00			0.001 μF	Cer	500 V	
C1258	283-0000-00			0.001 μF	Cer	500 V	
C1264	283-0167-00			0.1 μF	Cer	100 V	10%
C1269	290-0135-00			15 μF	Elect.	20 V	
C1285	290-0303-00			5 μF	Elect.	300 V	+75%—10%
				Semiconductor Device, Diodes			
CR1210	152-0333-00			Silicon	High speed and conductance		
CR1212	152-0333-00			Silicon	High speed and conductance		
CR1219	152-0333-00			Silicon	High speed and conductance		
CR1220	152-0333-00			Silicon	High speed and conductance		
CR1235	*152-0107-00			Silicon	Replaceable by 1N647		
CR1236	*152-0107-00			Silicon	Replaceable by 1N647		
CR1237	*152-0107-00			Silicon	Replaceable by 1N647		
CR1240	152-0333-00			Silicon	High speed and conductance		
CR1242	152-0333-00			Silicon	High speed and conductance		
CR1260	152-0333-00			Silicon	High speed and conductance		
CR1262	152-0333-00			Silicon	High speed and conductance		
CR1269	152-0333-00			Silicon	High speed and conductance		
CR1270	152-0333-00			Silicon	High speed and conductance		
CR1285	*152-0107-00			Silicon	Replaceable by 1N647		
CR1286	*152-0107-00			Silicon	Replaceable by 1N647		
CR1287	*152-0107-00			Silicon	Replaceable by 1N647		
VR1231	152-0305-00			Zener	1N3045B 1 W, 110 V, 5%		
VR1234	152-0195-00			Zener	1N751A 400 mW, 5.1 V, 5%		
VR1236	152-0428-00			Zener	1N987B 400 mW, 120 V, 5%		
VR1281	152-0305-00			Zener	1N3045B 1 W, 110 V, 5%		
VR1284	152-0195-00			Zener	1N751A 400 mW, 5.1 V, 5%		
VR1286	152-0428-00			Zener	1N987B 400 mW, 120 V, 5%		
VR1298	152-0305-00			Zener	1N3045B 1 W, 110 V, 5%		
				Transistors			
Q1210	151-0224-00			Silicon	NPN	TO-18	2N3692
Q1216	151-0224-00			Silicon	NPN	TO-18	2N3692
Q1230	151-0342-00			Silicon	PNP	TO-106	2N4249
Q1232	*151-0297-00			Silicon	NPN	TO-39	High voltage Tek Spec
Q1235	*151-0297-00			Silicon	NPN	TO-39	High voltage Tek Spec
Q1238	151-0292-00			Silicon	NPN	TO-92	TIS100
Q1245	151-0224-00			Silicon	NPN	TO-18	2N3692
Q1246	151-0224-00			Silicon	NPN	TO-18	2N3692
Q1260	151-0224-00			Silicon	NPN	TO-18	2N3692
Q1266	151-0224-00			Silicon	NPN	TO-18	2N3692

A17 STORAGE Circuit Board Assembly (cont)

Ckt. No.	Tektronix Part No.	Serial/Model No. Eff	Disc	Description
				Transistors (cont)
Q1280	151-0342-00			Silicon PNP TO-106 2N4249
Q1282	*151-0297-00			Silicon NPN TO-39 High voltage, Tek Spec
Q1285	*151-0297-00			Silicon NPN TO-39 High voltage, Tek Spec
Q1288	151-0292-00			Silicon NPN TO-92 TIS100
Q1292	151-0292-00			Silicon NPN TO-92 TIS100
Q1294	151-0292-00			Silicon NPN TO-92 TIS100
Q1296	151-0292-00			Silicon NPN TO-92 TIS100
				Resistors
Resistors are fixed, composition, ±10% unless otherwise indicated.				
R1200	316-0106-00			10 MΩ ¼ W
R1202	316-0102-00			1 kΩ ¼ W
R1203	316-0103-00			10 kΩ ¼ W
R1204	316-0105-00			1 MΩ ¼ W
R1206	316-0106-00			10 MΩ ¼ W
R1208	316-0103-00			10 kΩ ¼ W
R1209	316-0104-00			100 kΩ ¼ W
R1210	316-0333-00			33 kΩ ¼ W
R1212	316-0563-00			56 kΩ ¼ W
R1214	316-0184-00			180 kΩ ¼ W
R1216	301-0333-00			33 kΩ ½ W 5%
R1217	316-0221-00			220 Ω ¼ W
R1218	321-0330-00			26.7 kΩ ⅛ W Prec 1%
R1220	321-0337-00			31.6 kΩ ⅛ W Prec 1%
R1222	321-0286-00			9.31 kΩ ⅛ W Prec 1%
R1224	311-1227-00			5 kΩ, Var
R1226	311-1229-00			15 kΩ, Var
R1227	321-0270-00			6.34 kΩ ⅛ W Prec 1%
R1229	321-0334-00			29.4 kΩ ⅛ W Prec 1%
R1230	321-0373-00			75 kΩ ⅛ W Prec 1%
R1231	321-0334-00			29.4 kΩ ⅛ W Prec 1%
R1232	323-0399-00			140 kΩ ½ W Prec 1%
R1236	316-0222-00			2.2 kΩ ¼ W
R1237	316-0103-00			10 kΩ ¼ W
R1238	316-0823-00			82 kΩ ¼ W
R1239	323-0410-00			182 kΩ ½ W Prec 1%
R1240	316-0104-00			100 kΩ ¼ W
R1242	316-0273-00			27 kΩ ¼ W
R1244	316-0823-00			82 kΩ ¼ W

A17 STORAGE Circuit Board Assembly (cont)

Ckt. No.	Tektronix Part No.	Serial/Model No. Eff	Disc	Description		
				Resistors (cont)		
R1245	316-0103-00			10 kΩ	1/4 W	
R1250	316-0106-00			10 MΩ	1/4 W	
R1252	316-0102-00			1 kΩ	1/4 W	
R1253	316-0103-00			10 kΩ	1/4 W	
R1254	316-0105-00			1 MΩ	1/4 W	
R1256	316-0106-00			10 MΩ	1/4 W	
R1258	316-0103-00			10 kΩ	1/4 W	
R1259	316-0104-00			100 kΩ	1/4 W	
R1260	316-0333-00			33 kΩ	1/4 W	
R1262	316-0563-00			56 kΩ	1/4 W	
R1264	316-0184-00			180 kΩ	1/4 W	
R1266	301-0333-00			33 kΩ	1/2 W	5%
R1267	316-0221-00			220 Ω	1/4 W	
R1268	321-0330-00			26.7 kΩ	1/8 W	Prec 1%
R1270	321-0337-00			31.6 kΩ	1/8 W	Prec 1%
R1272	321-0286-00			9.31 kΩ	1/8 W	Prec 1%
R1274	311-1227-00			5 kΩ, Var		
R1276	311-1229-00			15 kΩ, Var		
R1277	321-0270-00			6.34 kΩ	1/8 W	Prec 1%
R1279	321-0334-00			29.4 kΩ	1/8 W	Prec 1%
R1280	321-0373-00			75 kΩ	1/8 W	Prec 1%
R1281	321-0334-00			29.4 kΩ	1/8 W	Prec 1%
R1282	323-0399-00			140 kΩ	1/2 W	Prec 1%
R1286	316-0222-00			2.2 kΩ	1/4 W	
R1287	316-0103-00			10 kΩ	1/4 W	
R1288	316-0823-00			82 kΩ	1/4 W	
R1289	323-0410-00			182 kΩ	1/2 W	Prec 1%
R1290	308-0503-00			6.8 Ω	2 1/2 W	WW 5%
R1291	303-0222-00			2.2 k	1 W	5%
R1292	311-1214-00			200 kΩ, Var		
R1293	311-1235-00			100 kΩ, Var		
R1294	301-0683-00			68 kΩ	1/2 W	5%
R1295	311-1235-00			100 kΩ, Var		
R1296	301-0683-00			68 kΩ	1/2 W	5%
R1297	304-0823-00			82 kΩ	1 W	
R1298	316-0184-00			180 kΩ	1/4 W	

SECTION 8
DIAGRAMS, CIRCUIT BOARDS, MECHANICAL AND REPACKAGING PARTS ILLUSTRATIONS

Symbols and Reference Designators

Electrical components shown on the diagrams are in the following units unless noted otherwise:

Capacitors =	Values one or greater are in picofarads (pF). Values less than one are in microfarads (μF).
Resistors =	Ohms (Ω)

Symbols used on the diagrams are based on USA Standard Y32.2-1967.

Logic symbology is based on MIL-STD-806B in terms of positive logic. Logic symbols depict the logic function performed and may differ from the manufacturer's data.

The following special symbols are used on the diagrams:

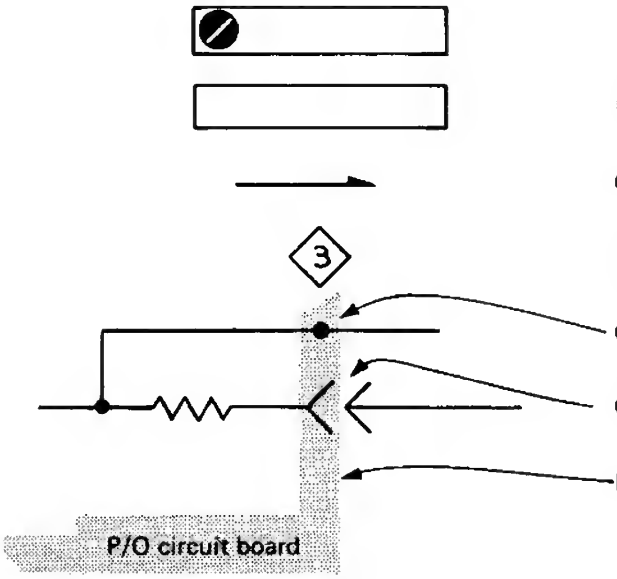

External screwdriver adjustment.

External control or connector.

Clockwise control rotation in direction of arrow.

Refer to diagram number indicated in diamond.

Connection soldered to circuit board.

Connection made to circuit board with interconnecting pin.

Blue tint encloses components located on circuit board.

The following prefix letters are used as reference designators to identify components or assemblies on the diagrams.

A	Assembly, separable or repairable (circuit board, etc.)
AT	Attenuator, fixed or variable
B	Motor
BT	Battery
C	Capacitor, fixed or variable
CR	Diode, signal or rectifier
DL	Delay line
DS	Indicating device (lamp)
F	Fuse
FL	Filter
H	Heat dissipating device (heat sink, heat radiator, etc.)
HR	Heater
J	Connector, stationary portion
K	Relay
L	Inductor, fixed or variable
LR	Inductor/resistor combination
M	Meter
Q	Transistor or silicon-controlled rectifier
P	Connector, movable portion
R	Resistor, fixed or variable
RT	Thermistor
S	Switch
T	Transformer
TP	Test point
U	Assembly, inseparable or non-repairable (integrated circuit, etc.)
V	Electron tube
VR	Voltage regulator (zener diode, etc.)
Y	Crystal

VOLTAGE AND WAVEFORM TEST CONDITIONS

Typical voltage measurements and waveform photographs were obtained under the following conditions unless noted otherwise on the individual diagrams. Voltage measurements were taken with no signal applied to the vertical input. Waveform photographs were taken with the PROBE CAL 0.6 V 1 kHz signal applied to the CH 1 input connector.

Test Oscilloscope

Frequency response	DC to 40 MHz.
Deflection factor	5 millivolts to 50 volts/division.
Probe ground	434 chassis ground.
Trigger source	External to indicate true time relationship between signals.
Recommended type	Tektronix 7504 with 7A16 plug-in unit and P6052 Probe.

Voltmeter

Type	Digital multimeter.
Input impedance	10 megohms.
Range	0 to 1 kilovolt.
Reference voltage	434 chassis ground.
Recommended type (as used for voltages on diagrams)	Tektronix 7504 with 7D13 Digital Multimeter Plug-In Unit.

434 Conditions

POWER/ INTENSITY	Pulled out (on) and set for normal display intensity.

Vertical Controls (both channels if applicable)

POSITION	Midrange
OUT: 5 MHz BW	Pushed in
OUT: INVERT	Push in
VOLTS/DIV	.1 V
Variable	CAL
Input Coupling	DC
Vertical Mode	CH 1

Trigger Controls

SLOPE	+
LEVEL	Midrange
SOURCE	CH 1
EXT ATTEN	1:1
COUPLING	DC

Sweep Controls

MODE	AUTO
TIME/DIV	1 ms
MAG	X1
Variable	Midrange

Storage Controls (upper and lower if applicable)

STORE	Non-store (button out)
ENHANCE	Off (button out)
ENHANCE LEVEL	Fully counterclockwise

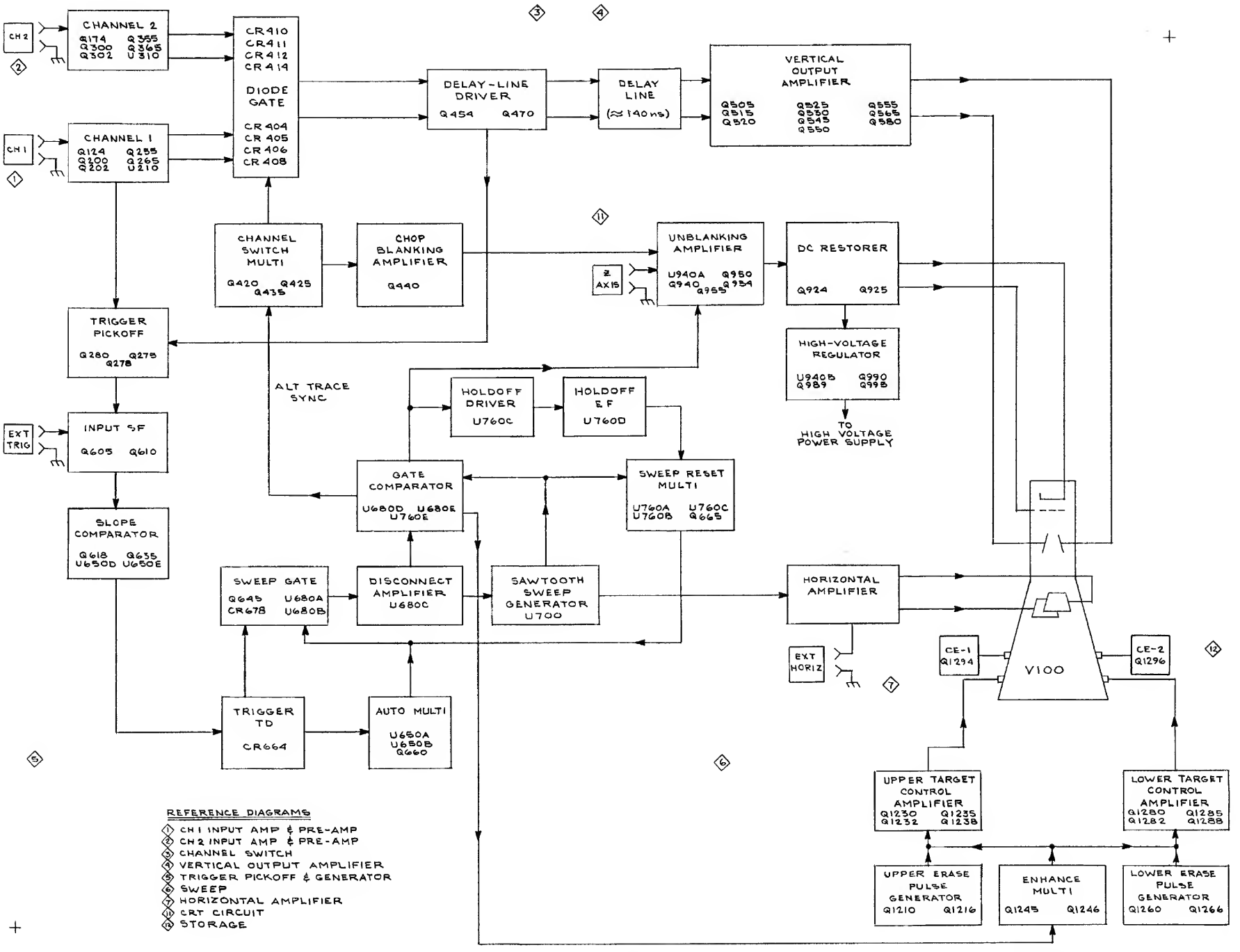

BLOCK DIAGRAM 0771 hq

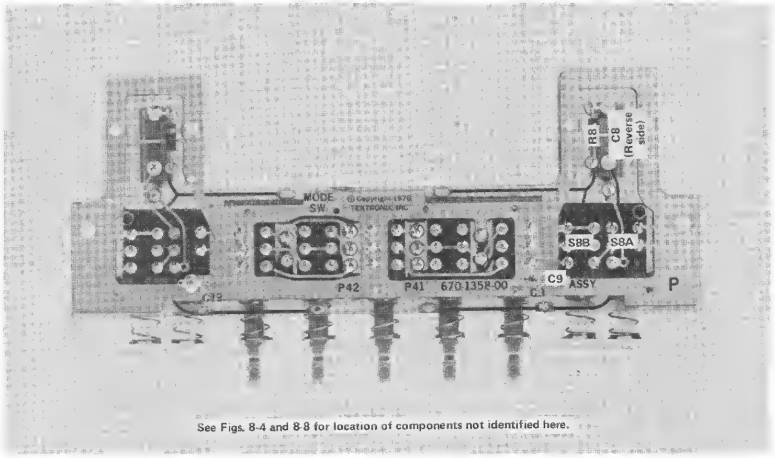

See Figs. 8-4 and 8-8 for location of components not identified here.

Fig. 8-1. P/O A3. Partial Vertical Mode Switch circuit board.

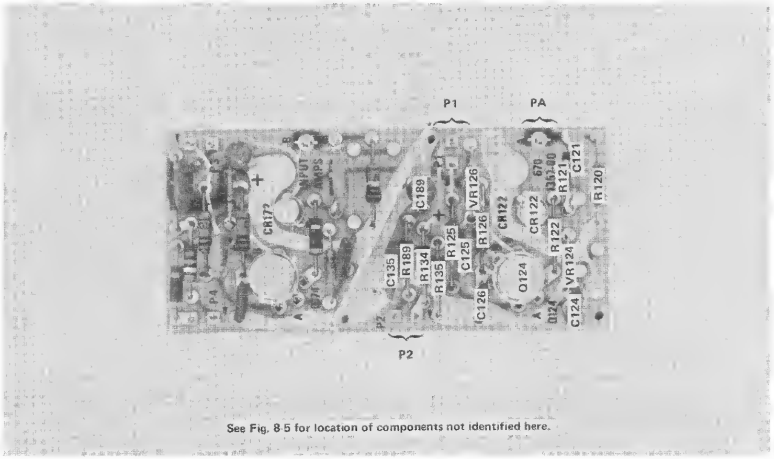

See Fig. 8-5 for location of components not identified here.

Fig. 8-2 P/O A1. Partial Input Amplifier circuit board.

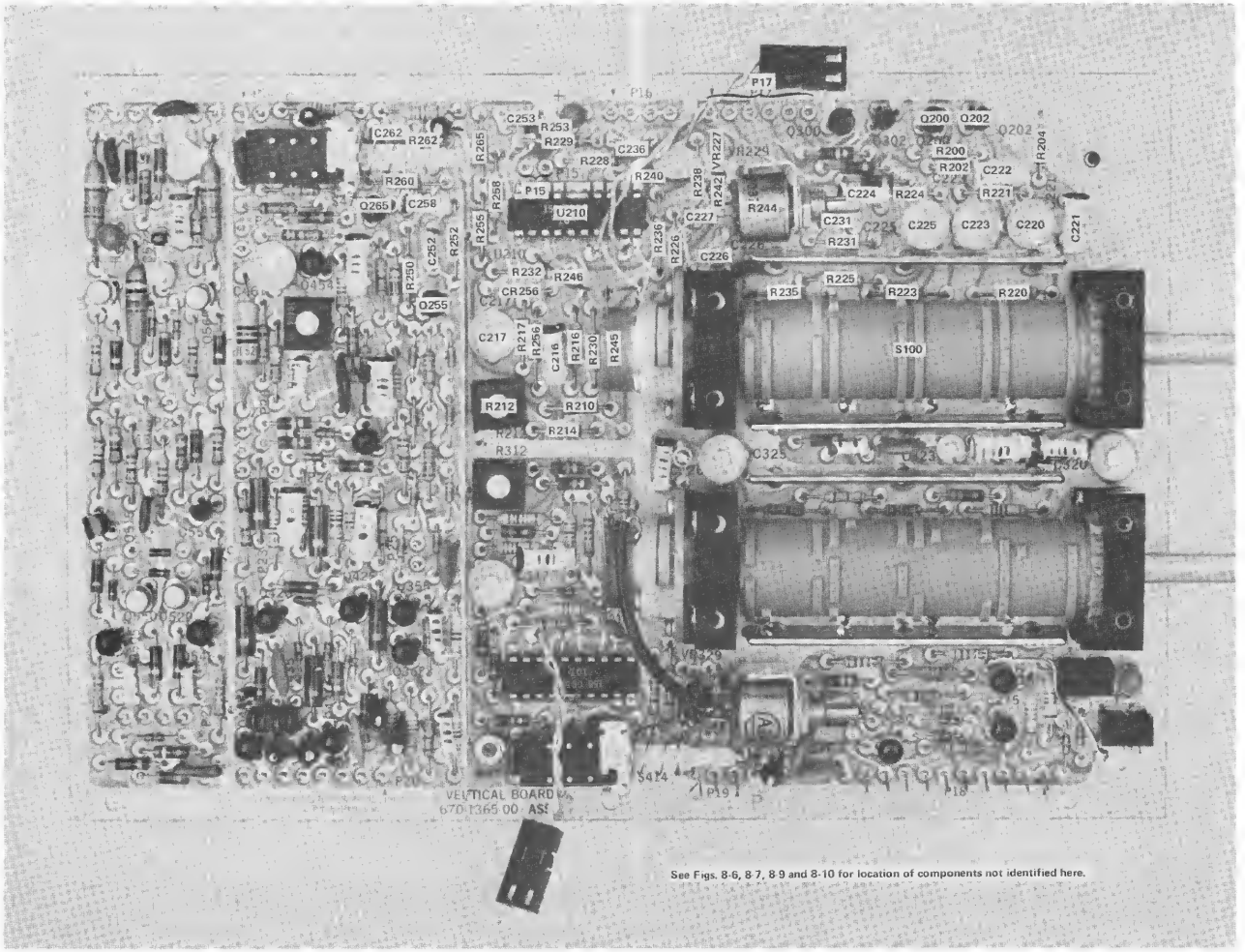

See Figs. 8-6, 8-7, 8-9 and 8-10 for location of components not identified here.

Fig. 8-3. P/O A2. Partial Vertical circuit board.

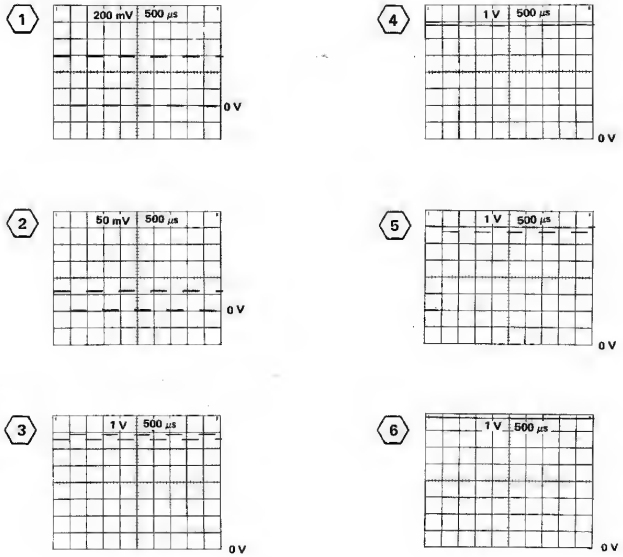
1
200 mV
500 µs
0 V
2
50 mV
500 µs
0 V
3
1 V
500 µs
0 V
4
1 V
500 µs
0 V
5
1 V
500 µs
0 V
6
1 V
500 µs
0 V

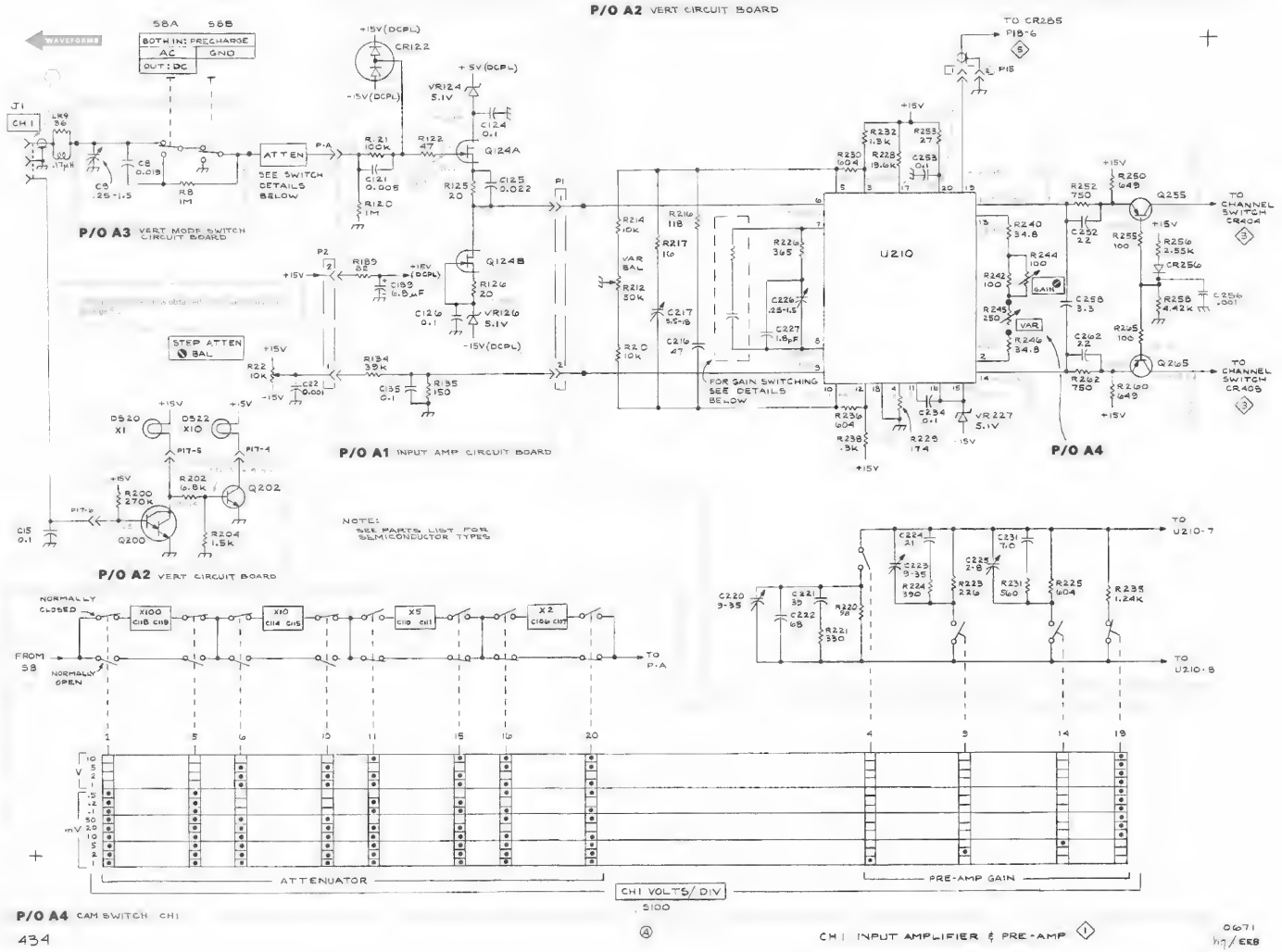
P/O A2 VERT CIRCUIT BOARD
WAVEFORMS
S8A
S8B
BOTH IN: PRECHARGE
AC
GND
OUT: DC
J1
CH 1
ATTEN
SEE SWITCH DETAILS BELOW
P/O A3 VERT MODE SWITCH CIRCUIT BOARD
STEP ATTEN
BAL
P/O A1 INPUT AMP CIRCUIT BOARD
U210
FOR GAIN SWITCHING SEE DETAILS BELOW
TO CR285
TO CHANNEL SWITCH CR404
TO CHANNEL SWITCH CR409
P/O A4
P/O A2 VERT CIRCUIT BOARD
NOTE: SEE PARTS LIST FOR SEMICONDUCTOR TYPES
NORMALLY CLOSED
NORMALLY OPEN
FROM S8
TO P-A
TO U210-7
TO U210-8
ATTENUATOR
PRE-AMP GAIN
CH1 VOLTS/DIV
S100
P/O A4 CAM SWITCH CH1
434
CH1 INPUT AMPLIFIER & PRE-AMP
0671
hg/EEB

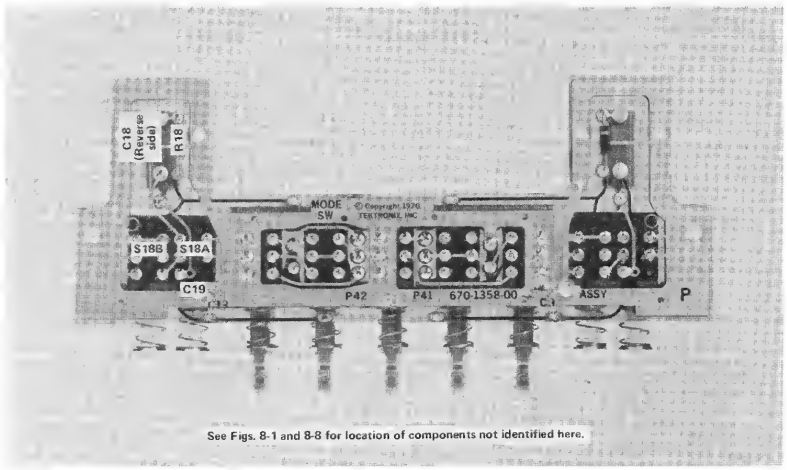

Fig. 8-4. P/O A3. Partial Vertical Mode Switch circuit board.

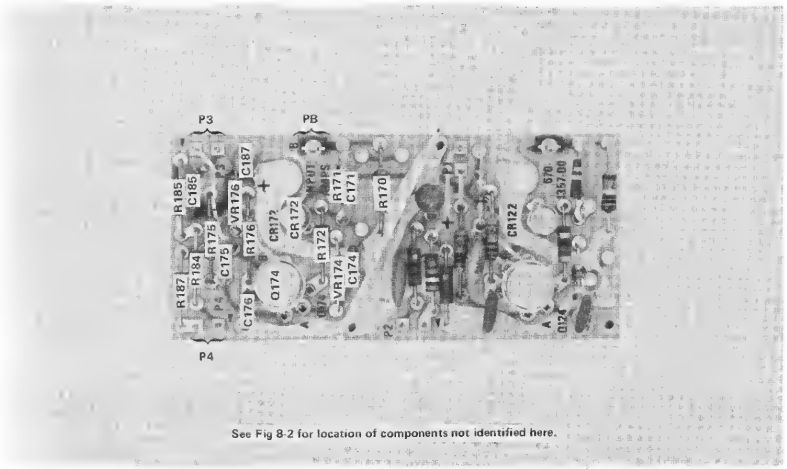

Fig. 8-5. P/O A1. Partial Input Amplifier circuit board.

434

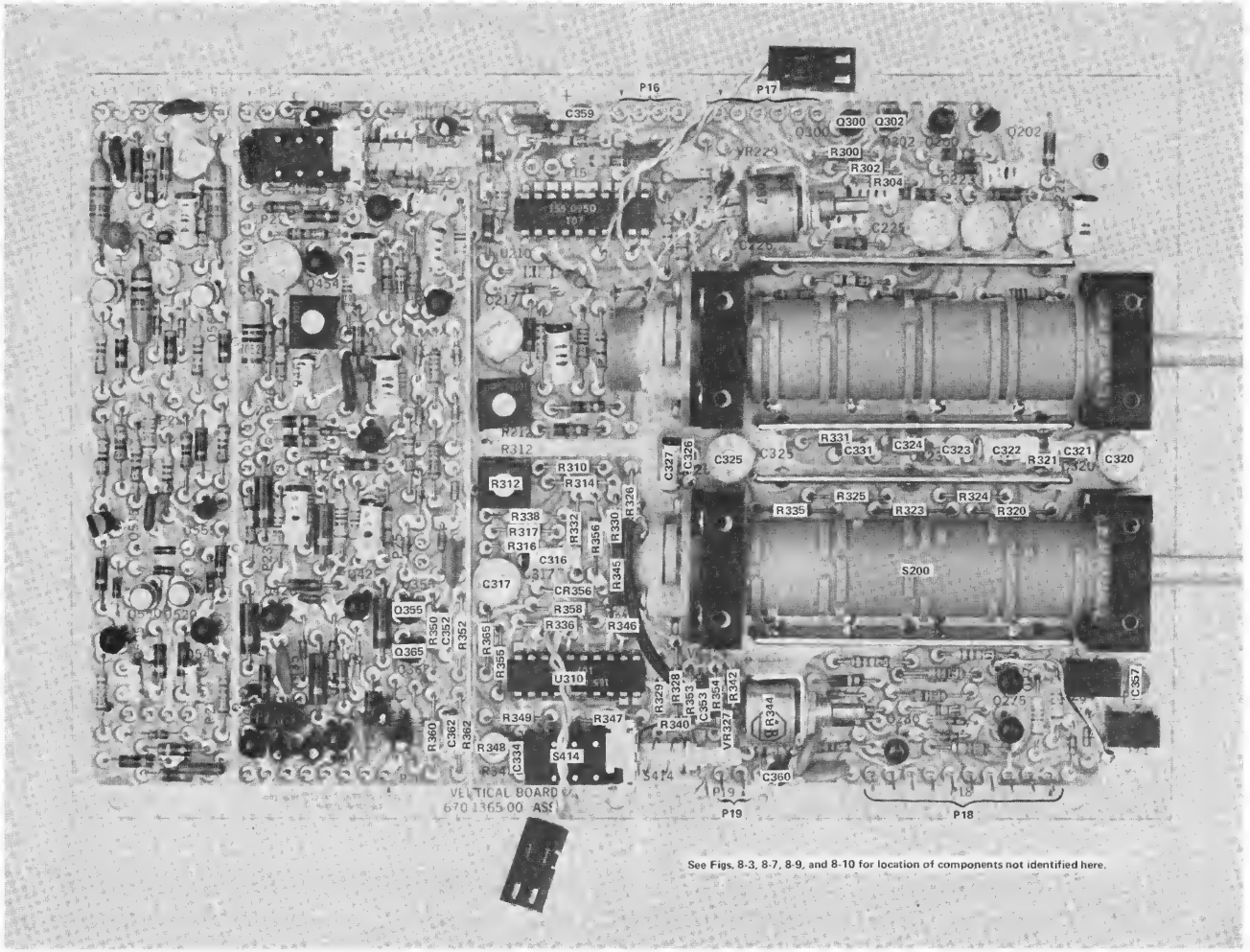

Fig. 8-6. P/O A2. Partial Vertical circuit board.

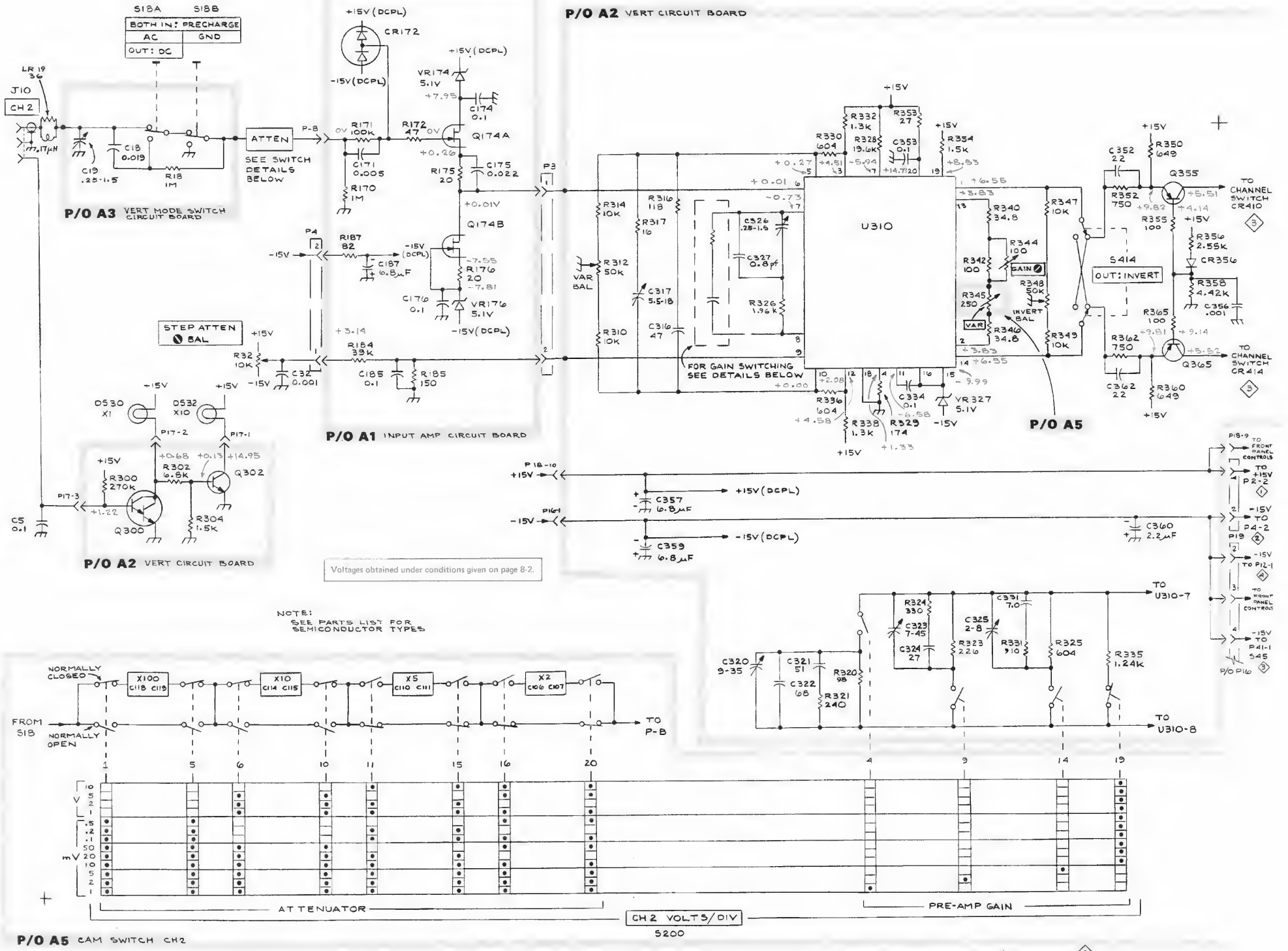

Voltages obtained under conditions given on page 8-2.

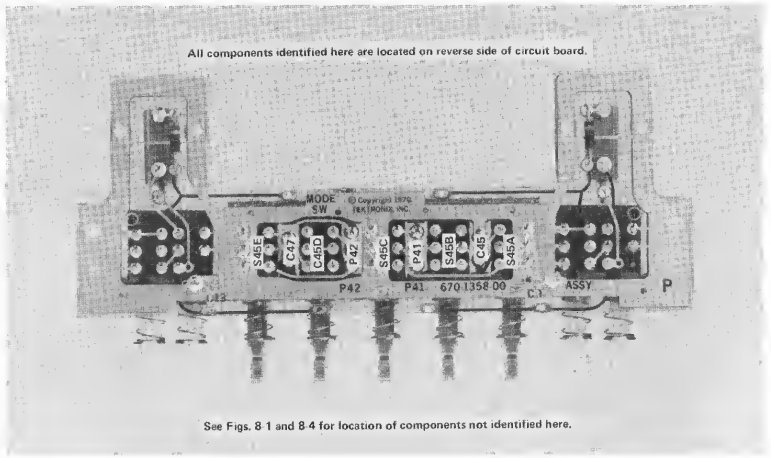

Fig. 8-8. P/O A3. Partial Vertical Mode Switch circuit board.

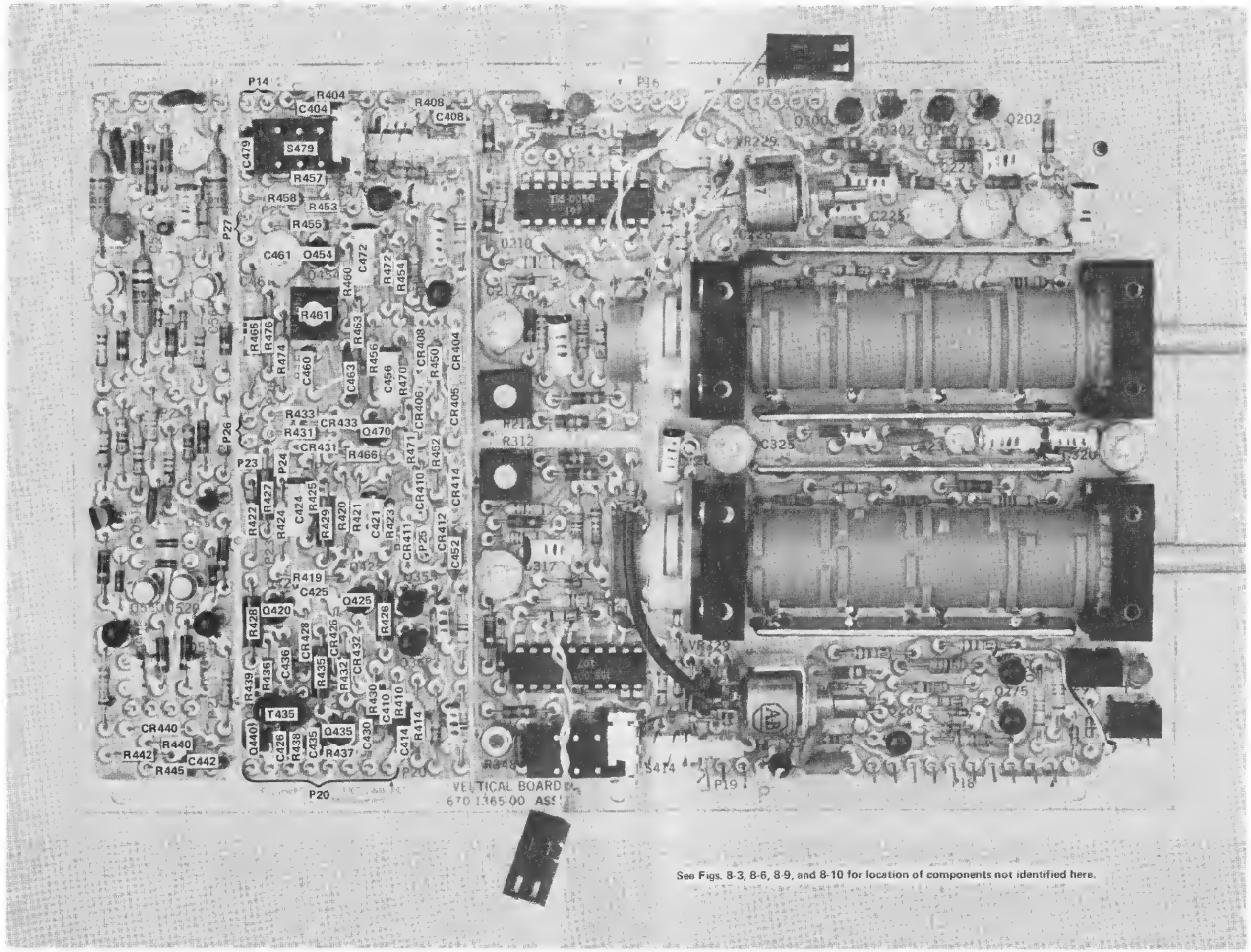

Fig. 8-7. P/O A2. Partial Vertical circuit board.

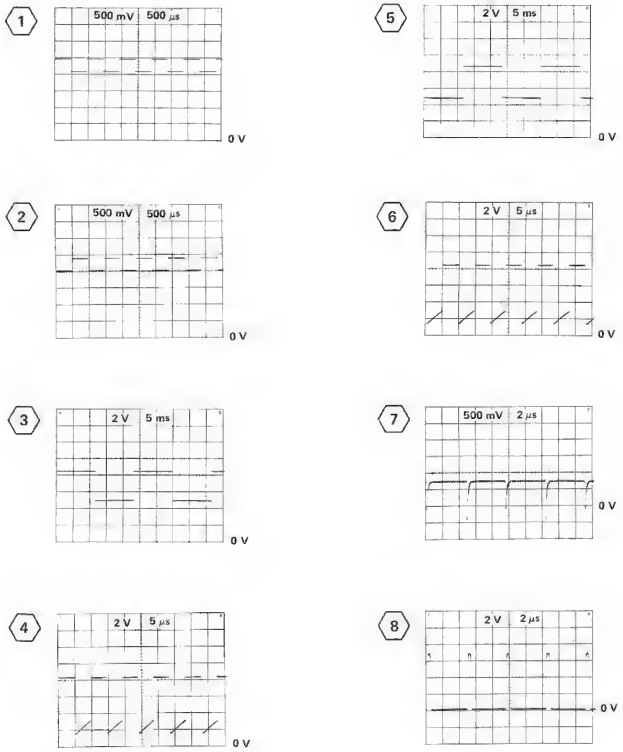
1
500 mV 500 µs
0 V
2
500 mV 500 µs
0 V
3
2 V 5 ms
0 V
4
2 V 5 µs
0 V
5
2 V 5 ms
0 V
6
2 V 5 µs
0 V
7
500 mV 2 µs
0 V
8
2 V 2 µs
0 V

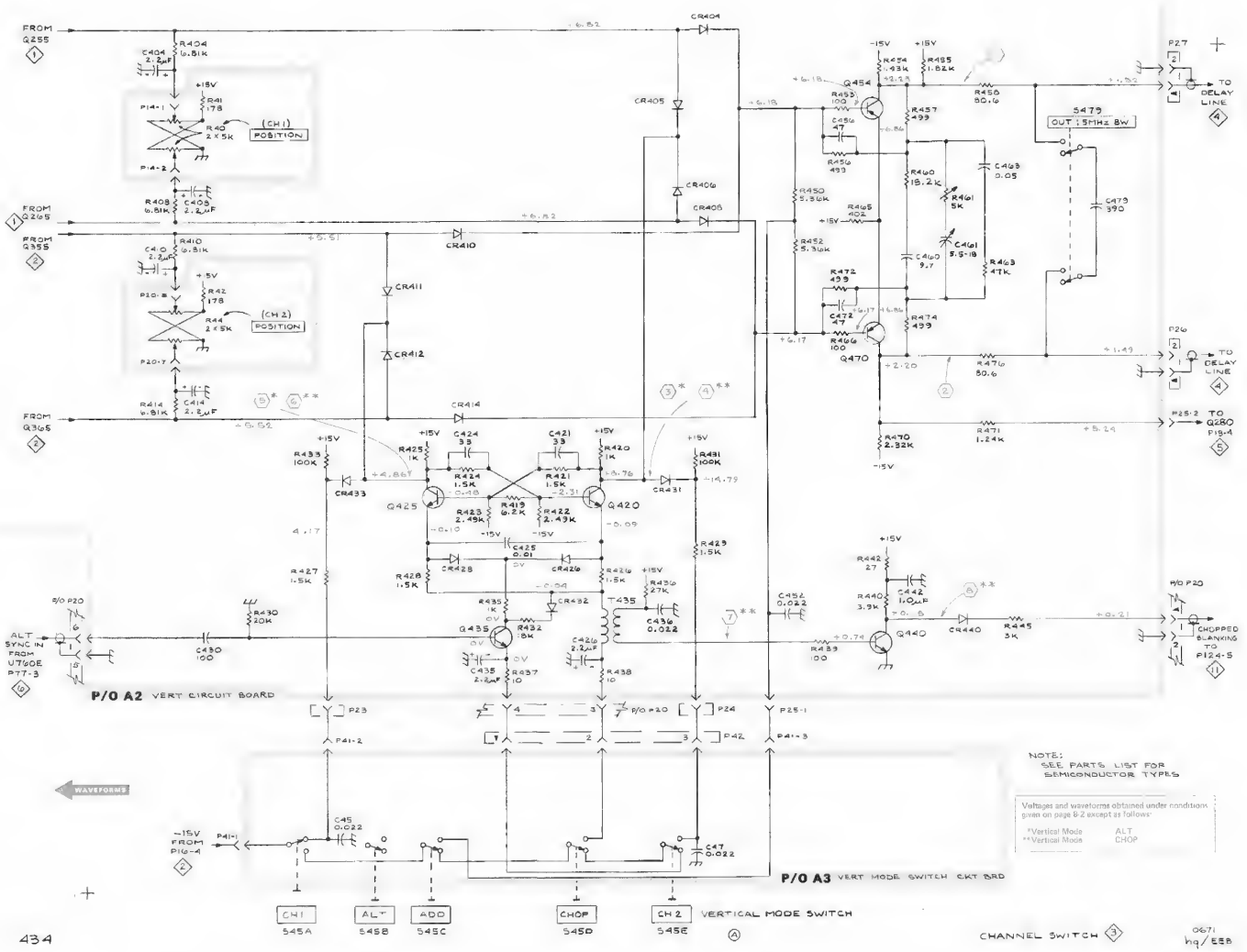
FROM Q255
FROM Q265
FROM Q355
FROM Q365
(CH 1) POSITION
(CH 2) POSITION
TO DELAY LINE
TO Q280
CHOPPED BLANKING TO P124-5
ALT SYNC IN FROM U760E P77-3
P/O A2 VERT CIRCUIT BOARD
P/O A3 VERT MODE SWITCH CKT BRD
WAVEFORMS
-15V FROM P16-4
CH1 S45A
ALT S45B
ADD S45C
CHOP S45D
CH 2 S45E
VERTICAL MODE SWITCH
CHANNEL SWITCH
NOTE: SEE PARTS LIST FOR SEMICONDUCTOR TYPES
Voltages and waveforms obtained under conditions given on page 8-2 except as follows:
*Vertical Mode ALT
**Vertical Mode CHOP
0671 hq/E58

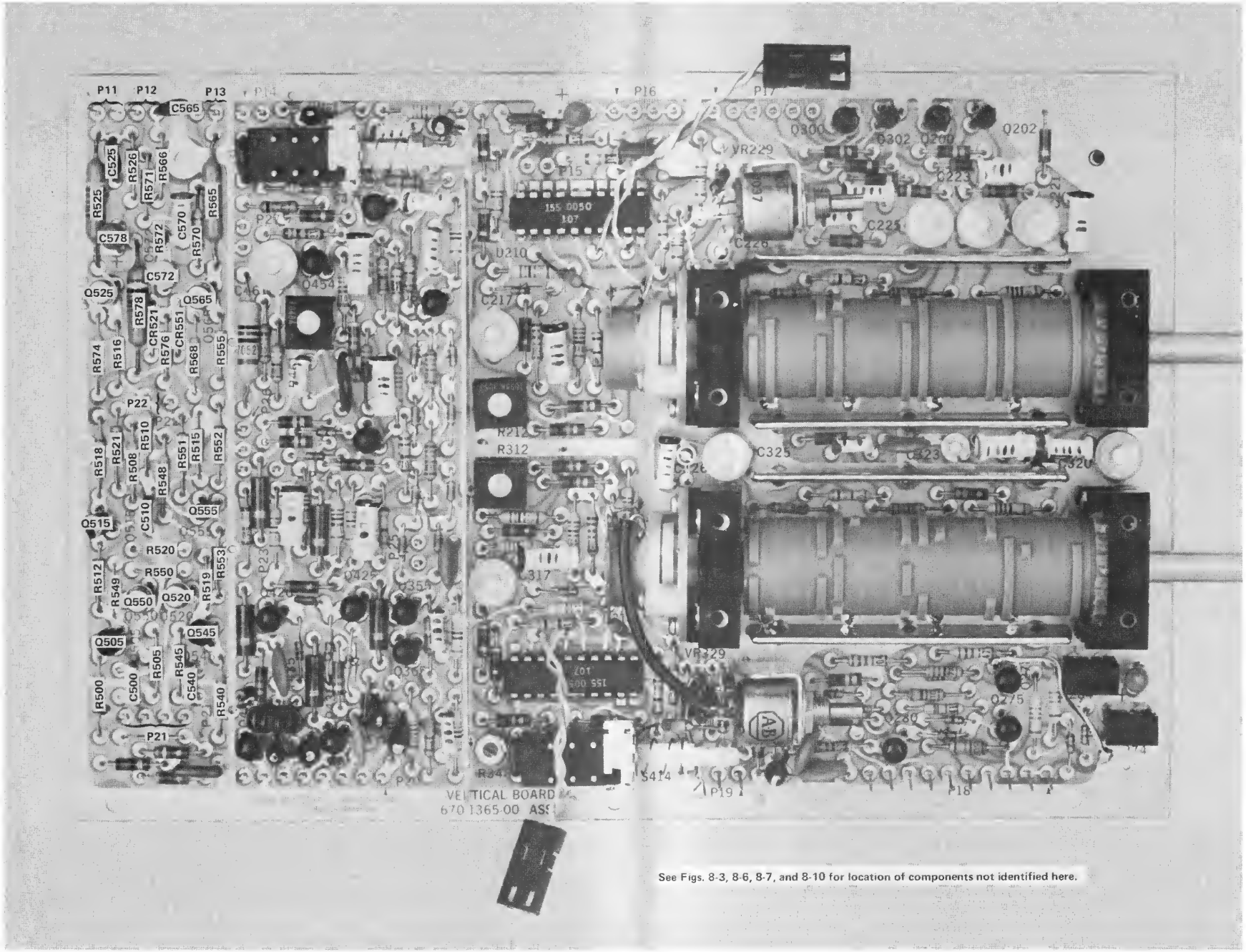

See Figs. 8-3, 8-6, 8-7, and 8-10 for location of components not identified here.

Fig. 8-9. P/O A2. Partial Vertical circuit board.

Ⓐ

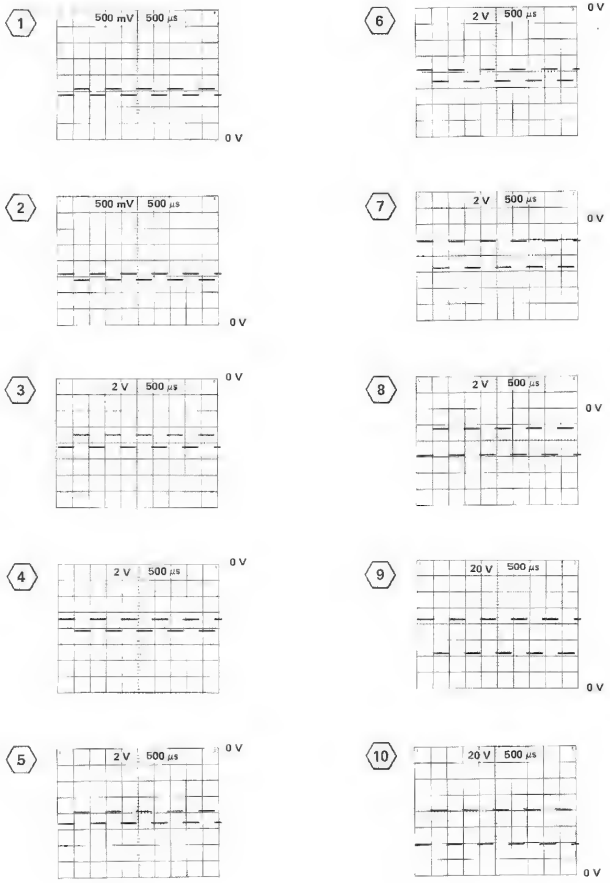

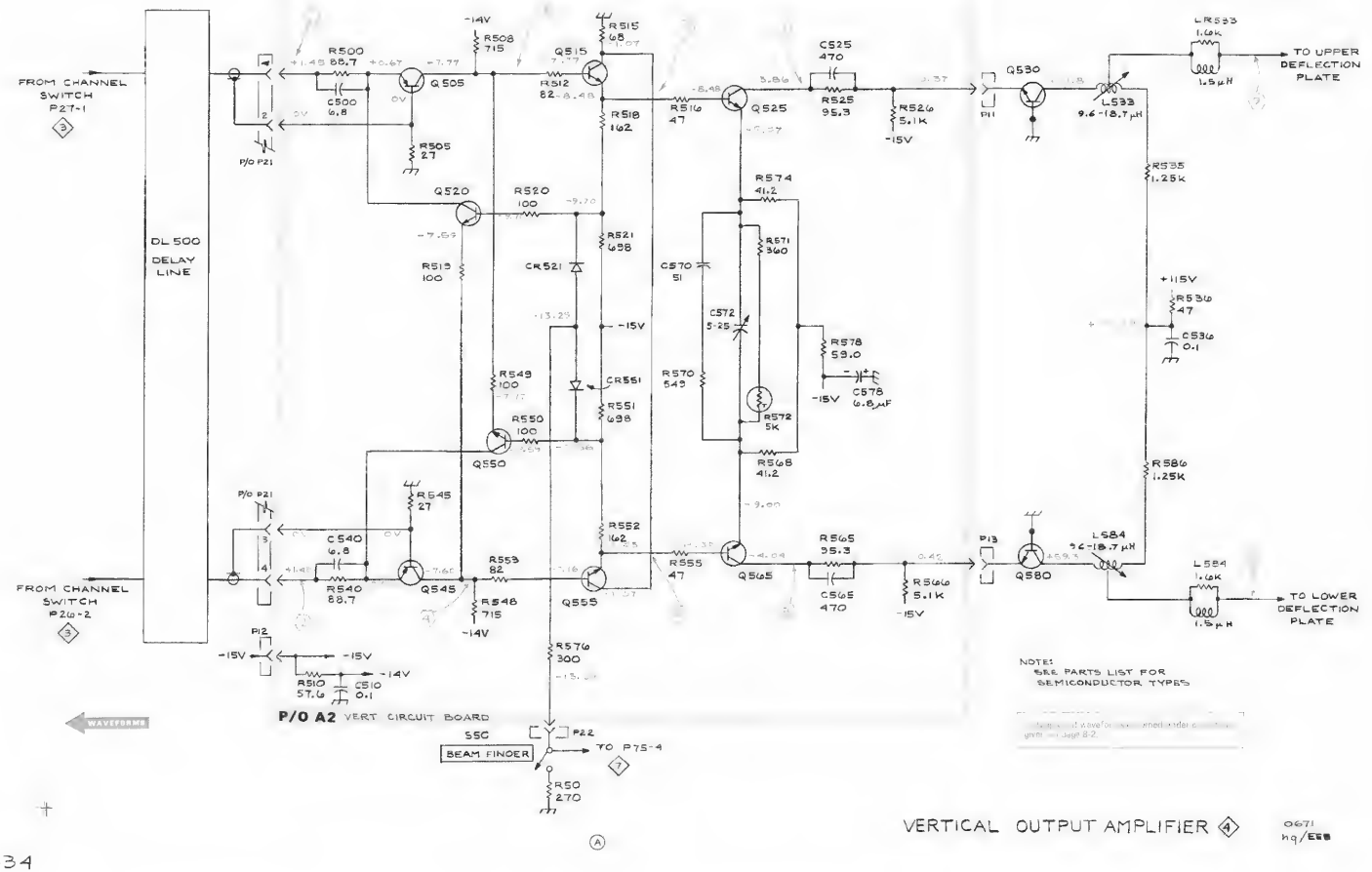

VERTICAL OUTPUT AMPLIFIER 4

0671
hg/EEB

434

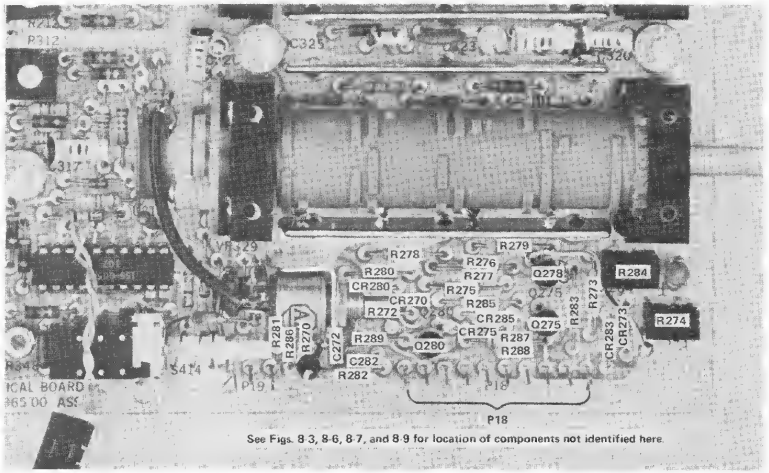

Fig. 8-10. P/O A2. Partial Vertical circuit board. Ⓐ

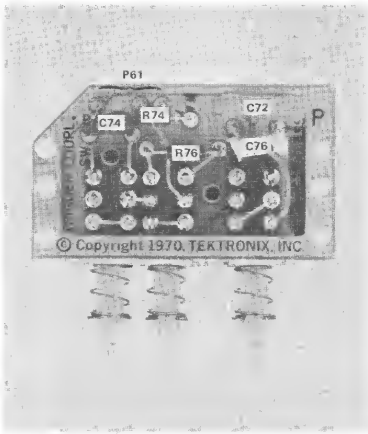

Fig. 8-11. A7. Trigger Coupling Switch Circuit board. Ⓐ

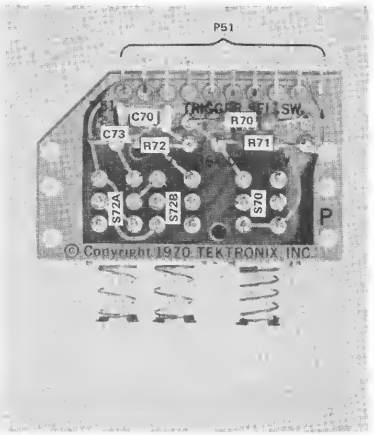

Fig. 8-12. A6. Trigger Source Switch circuit board. Ⓐ

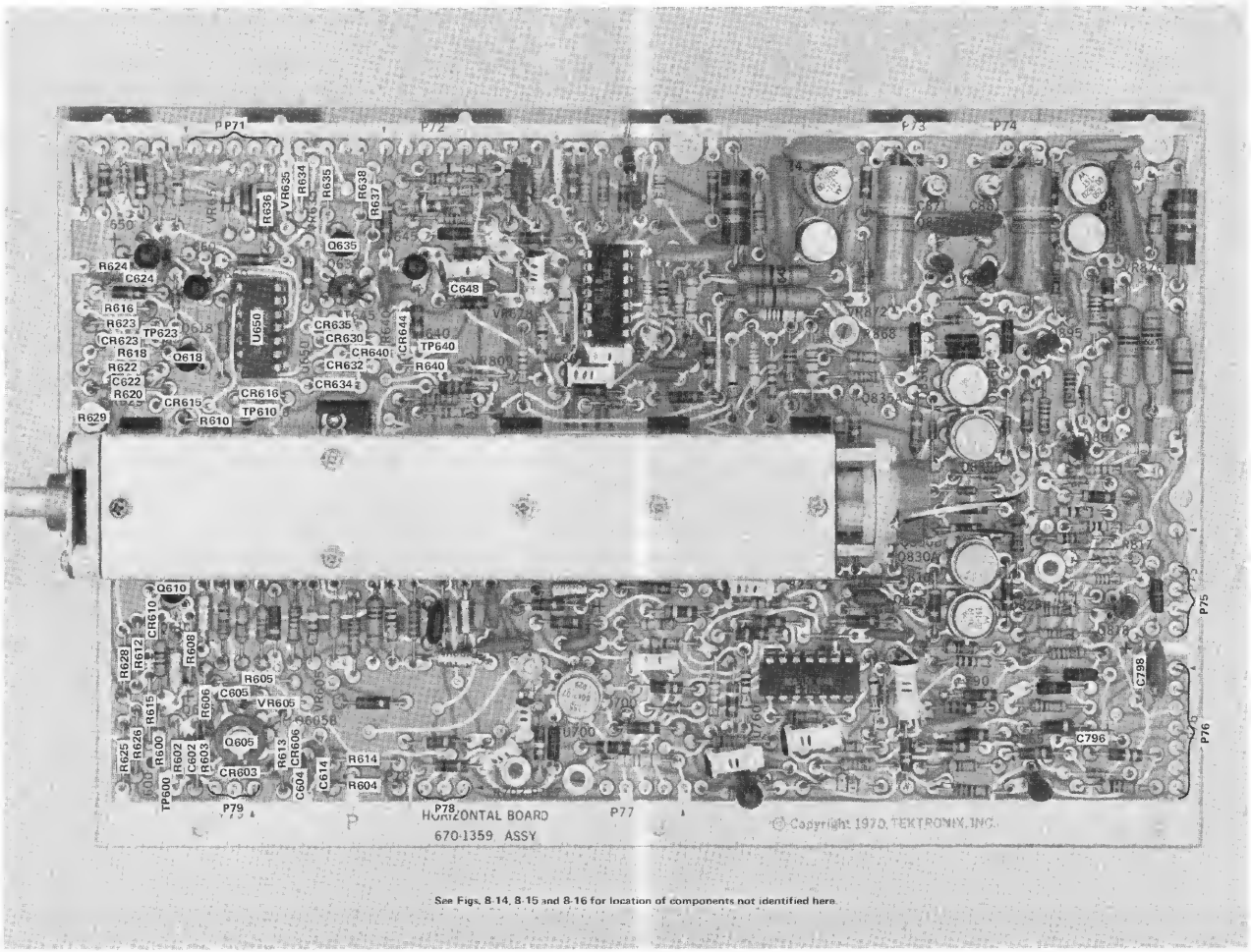

Fig. 8-13. P/O A8. Partial Horizontal circuit board. Ⓐ

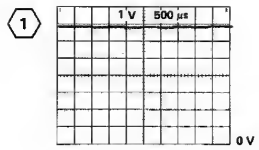

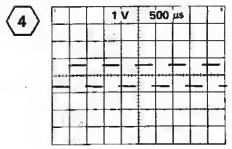

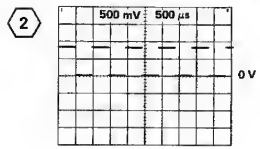

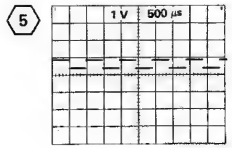

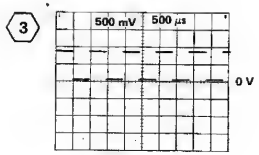

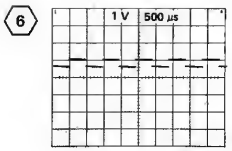

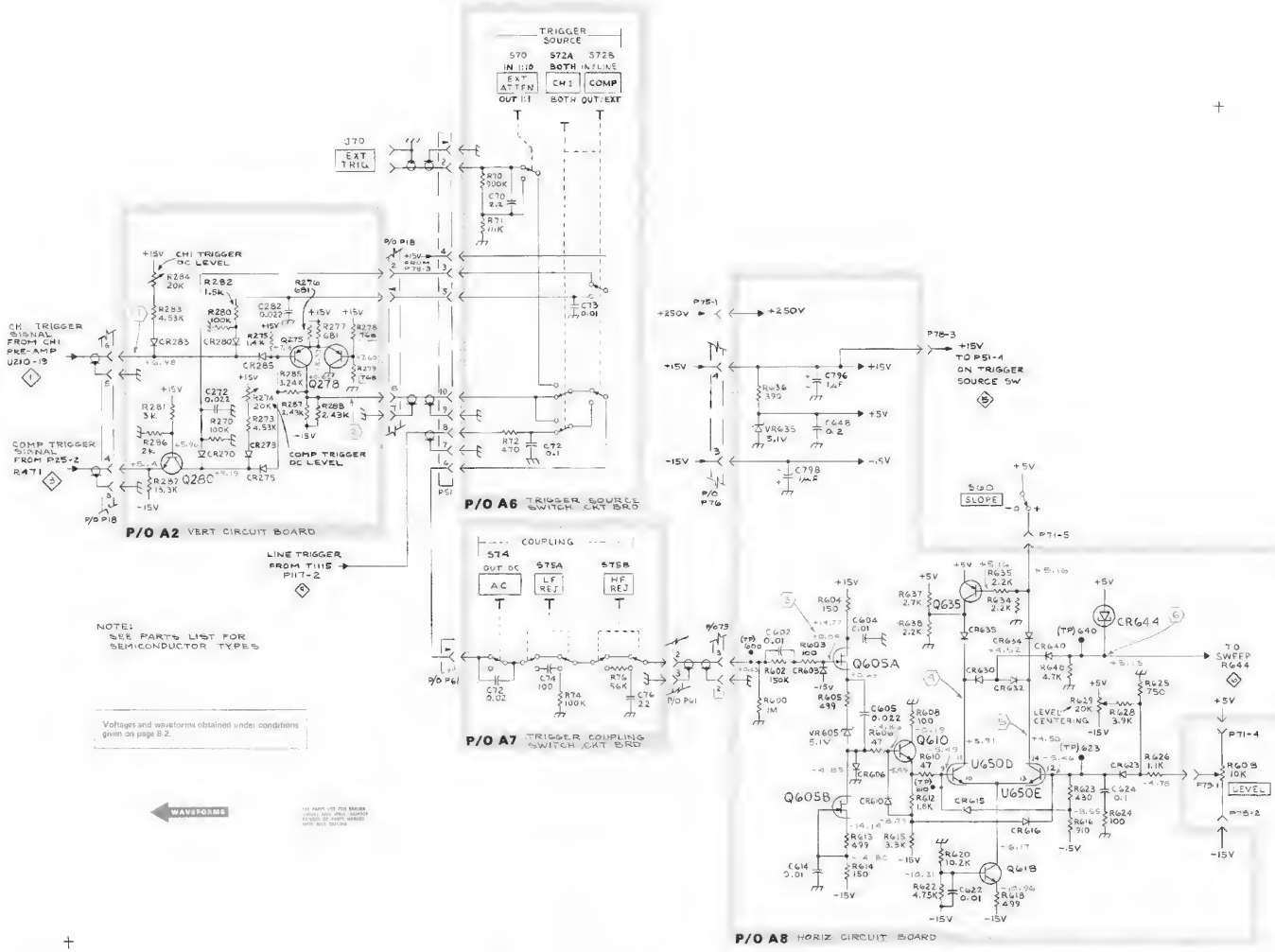

TRIGGER PICKOFF & GENERATOR ⑤

1071 mgf/hq

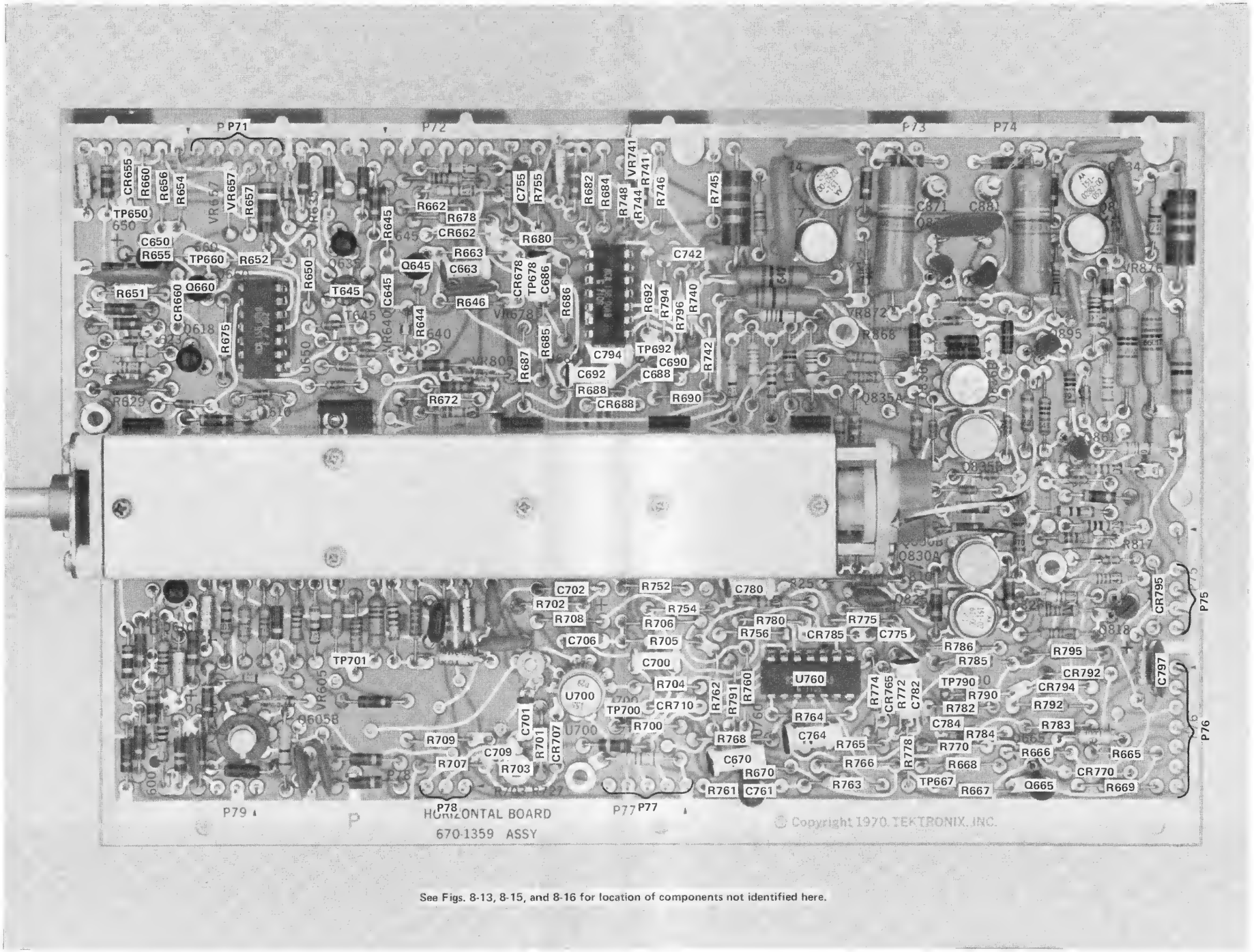

See Figs. 8-13, 8-15, and 8-16 for location of components not identified here.

Fig. 8-14. P/O A8. Partial Horizontal circuit board.

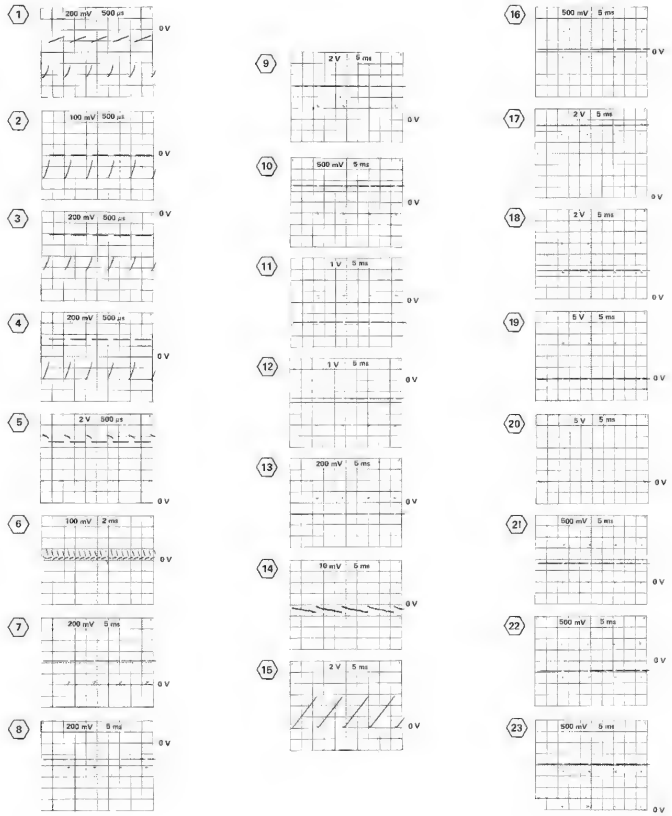
1
200 mV 500 µs
0 V
2
100 mV 500 µs
0 V
3
200 mV 500 µs
0 V
4
200 mV 500 µs
0 V
5
2 V 500 µs
0 V
6
100 mV 2 ms
0 V
7
200 mV 5 ms
0 V
8
200 mV 5 ms
0 V
9
2 V 5 ms
0 V
10
500 mV 5 ms
0 V
11
1 V 5 ms
0 V
12
1 V 5 ms
0 V
13
200 mV 5 ms
0 V
14
10 mV 5 ms
0 V
15
2 V 5 ms
0 V
16
500 mV 5 ms
0 V
17
2 V 5 ms
0 V
18
2 V 5 ms
0 V
19
5 V 5 ms
0 V
20
5 V 5 ms
0 V
21
500 mV 5 ms
0 V
22
500 mV 5 ms
0 V
23
500 mV 5 ms
0 V

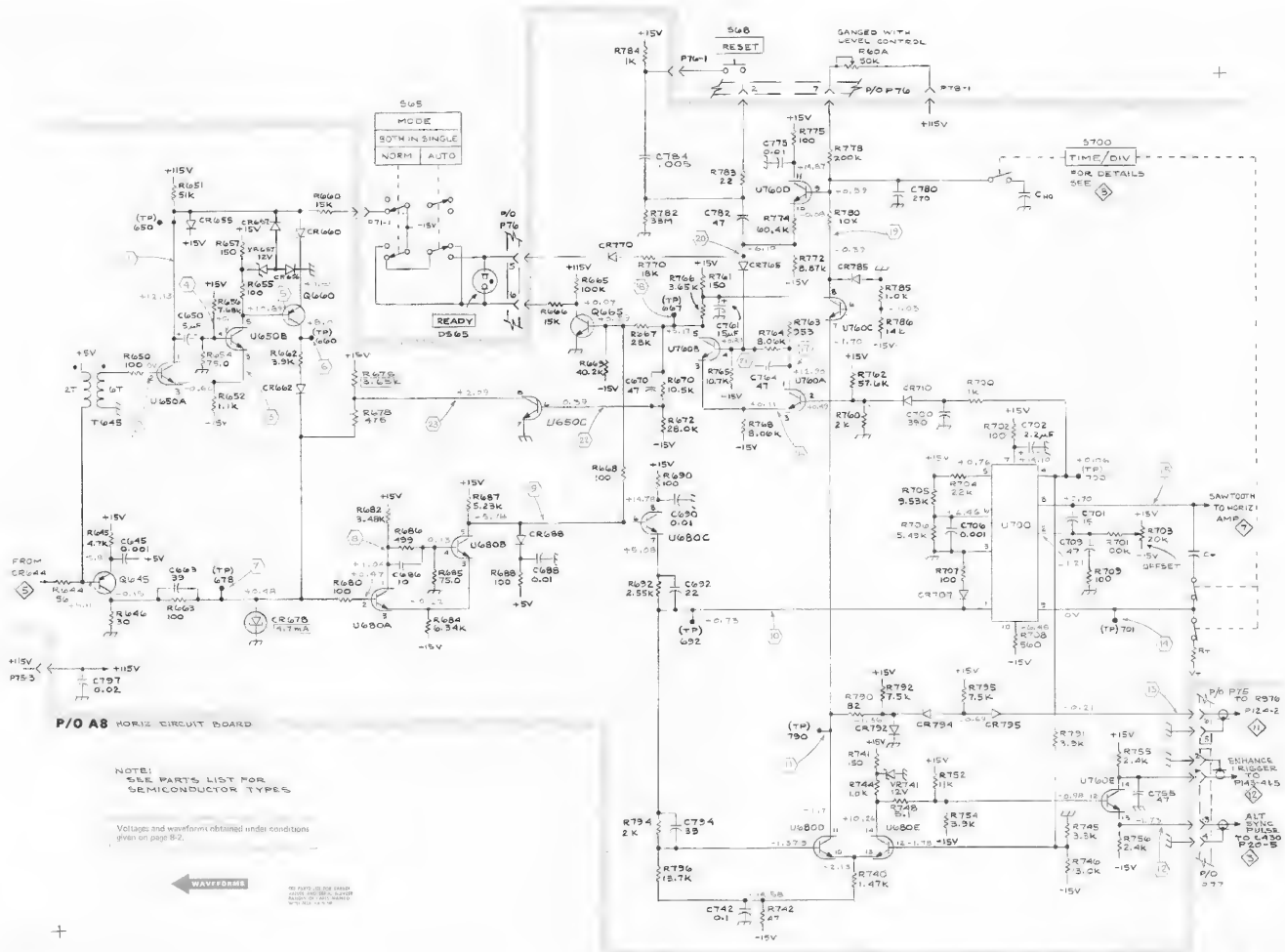
S68
RESET
GANGED WITH LEVEL CONTROL
R60A 50K
P/O P76
S65
MODE
BOTH IN SINGLE
NORM
AUTO
READY
DS65
S700
TIME/DIV
FOR DETAILS SEE 3
U700
SAWTOOTH TO HORIZ AMP 7
OFFSET
ENHANCE 1 RIGGER TO P143-4L5
ALT SYNC PULSE TO L430 P20-5
FROM CR644
P/O A8 HORIZ CIRCUIT BOARD
NOTE:
SEE PARTS LIST FOR SEMICONDUCTOR TYPES
Voltages and waveforms obtained under conditions given on page 8-2.
WAVEFORMS
SWEEP 6
1071
hq/EEB

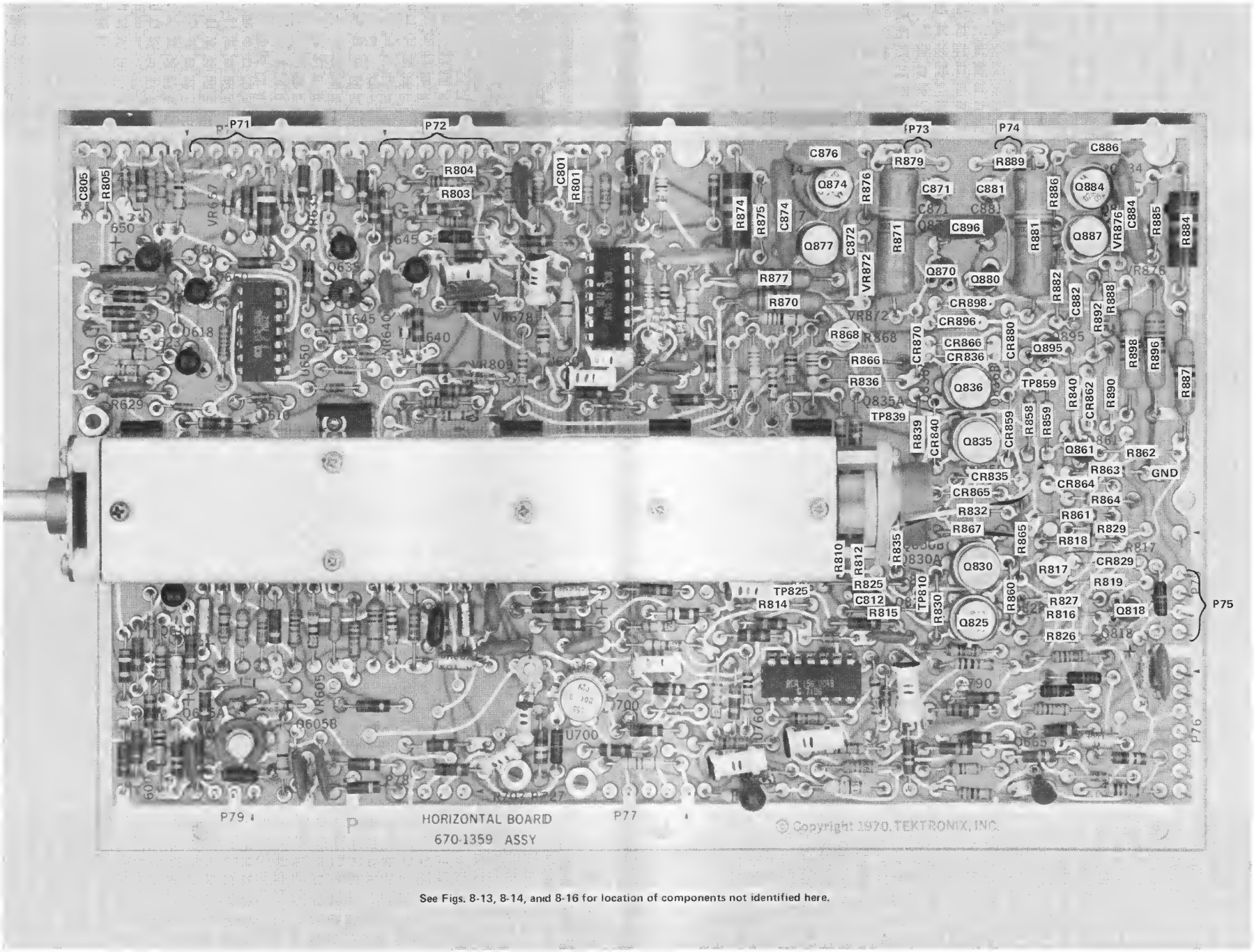

See Figs. 8-13, 8-14, and 8-16 for location of components not identified here.

Fig. 8-15. P/O A8. Partial Horizontal circuit board.

Ⓐ

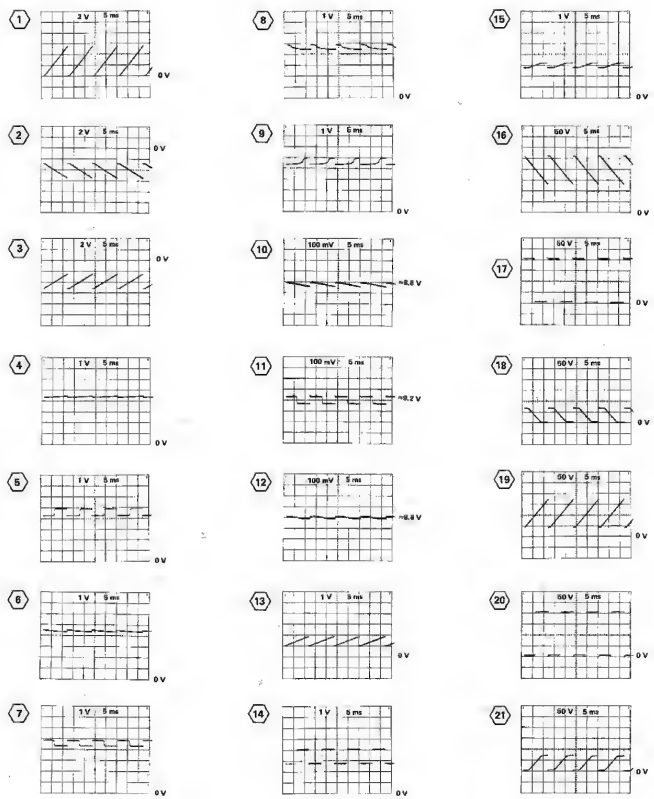

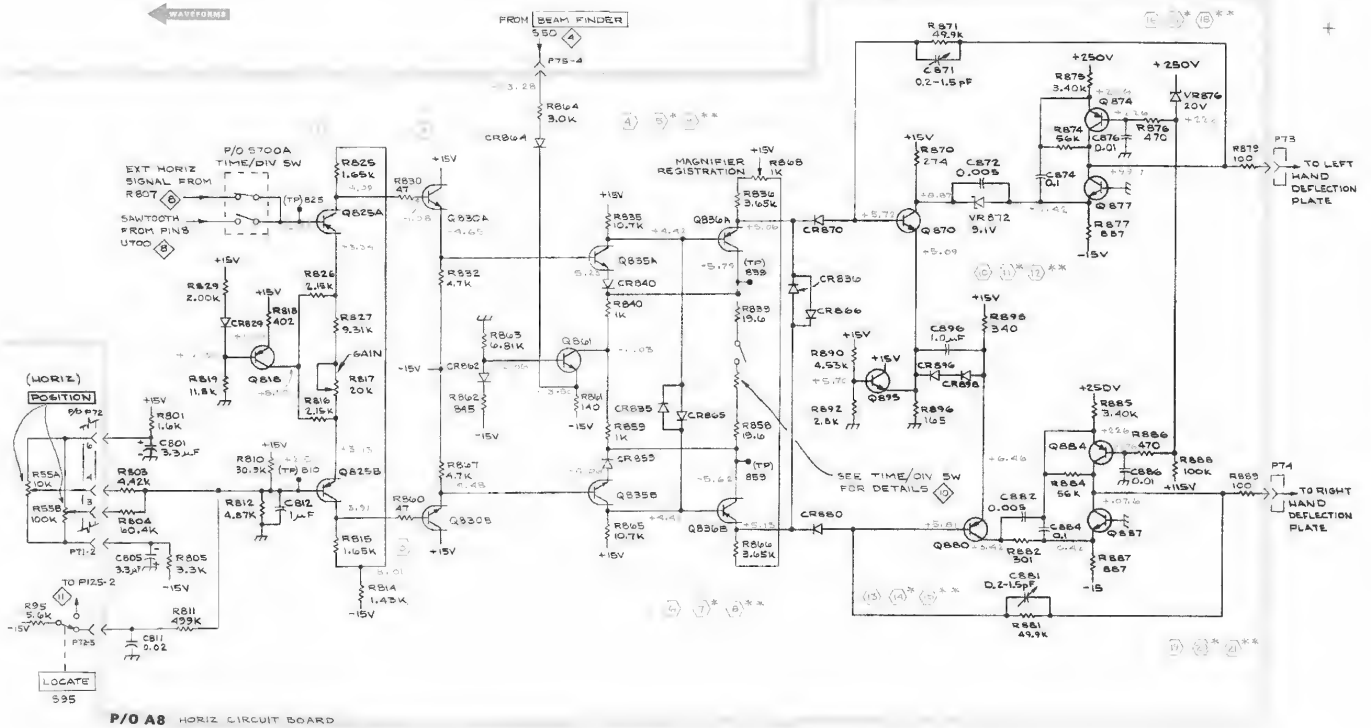

P/O A8 HORIZ CIRCUIT BOARD

NOTE:
SEE PARTS LIST FOR SEMICONDUCTOR TYPES

Voltages and waveforms obtained under conditions given on page 3-2 except as follows.

*MAG	20 μs
**BEAM FINDER	Pressed

HORIZONTAL AMPLIFIER 7

0671
hq/EEB

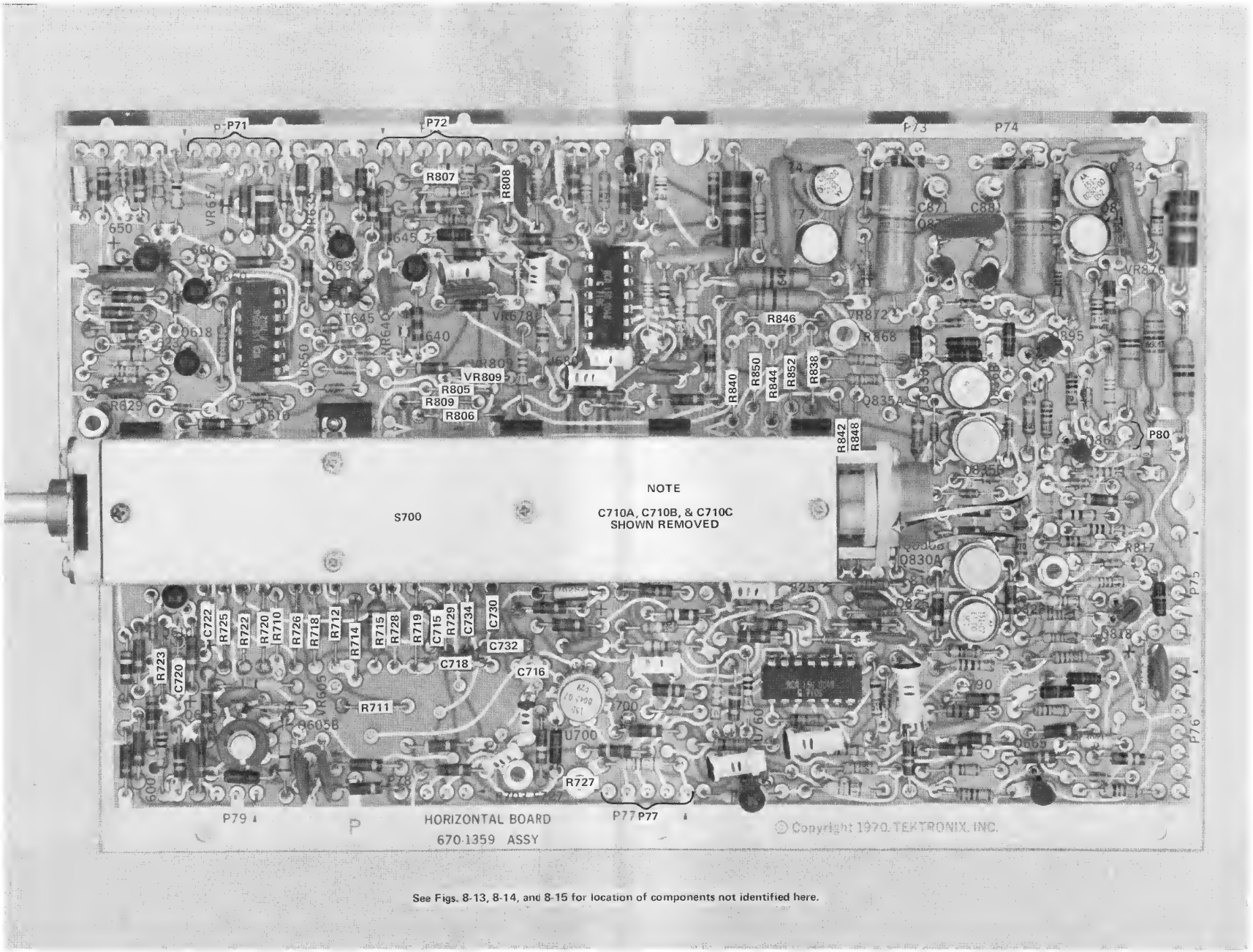

See Figs. 8-13, 8-14, and 8-15 for location of components not identified here.

Fig. 8-16. P/O A8. Partial Horizontal circuit board.

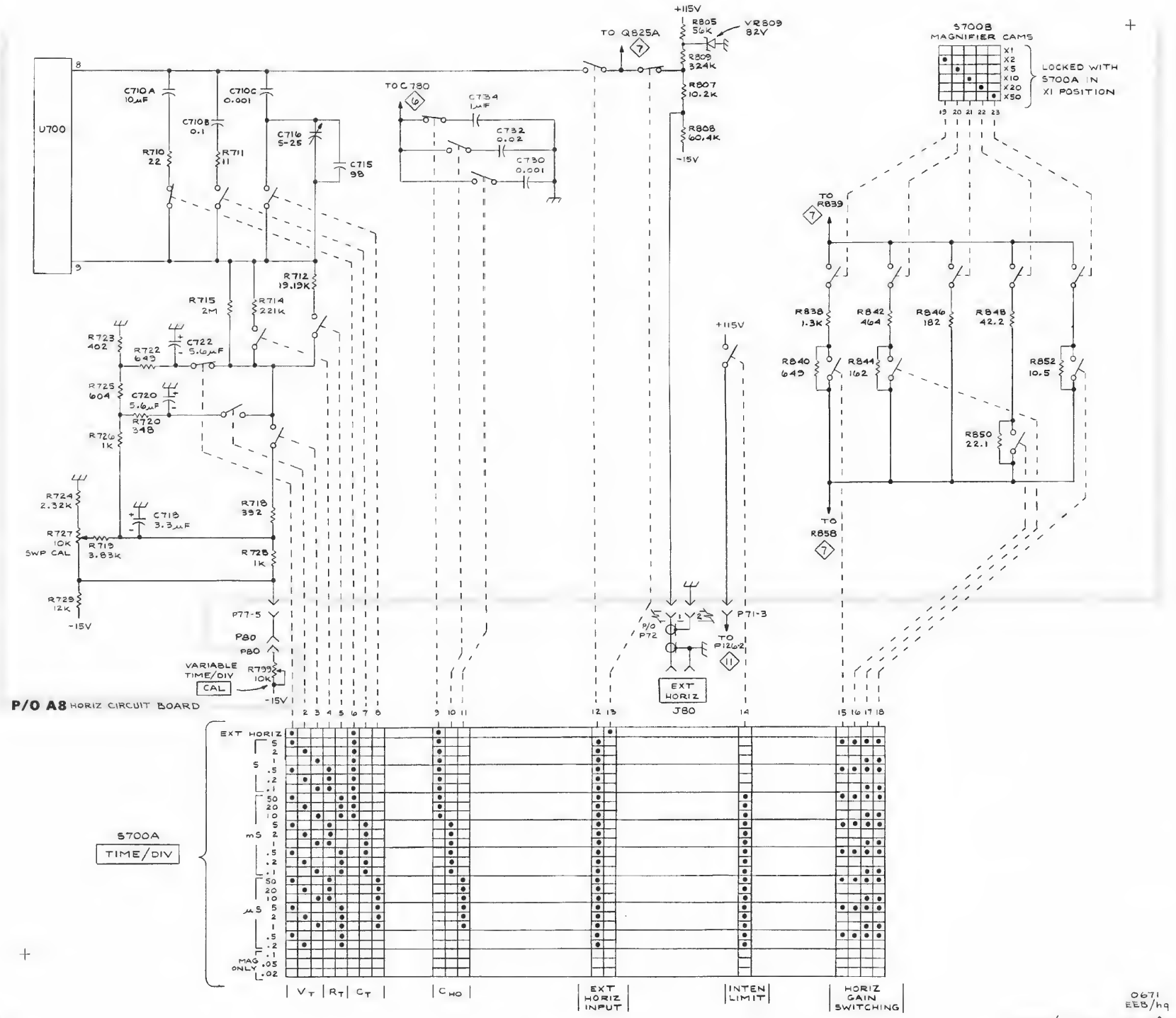

TIME/DIV SWITCH 8

0671
EEB/hq

A

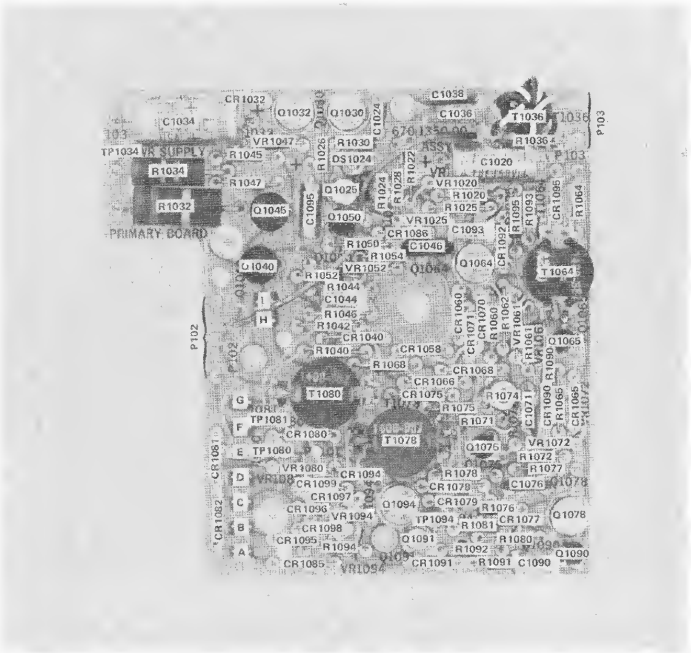
PRIMARY BOARD
TP1034 VR SUPPLY
R1034
R1032
P102
P103
T1080
T1078
T1036
T1064
C1038
C1034
C1036
C1020
C1046
C1086
C1093
C1044
C1040
C1058
C1068
C1066
C1075
C1076
C1077
C1078
C1079
C1080
C1081
C1082
C1085
C1090
C1091
C1092
C1094
C1095
C1096
C1097
C1098
C1099
C1100
C1101
C1102
C1103
C1104
C1105
C1106
C1107
C1108
C1109
C1110
C1111
C1112
C1113
C1114
C1115
C1116
C1117
C1118
C1119
C1120
C1121
C1122
C1123
C1124
C1125
C1126
C1127
C1128
C1129
C1130
C1131
C1132
C1133

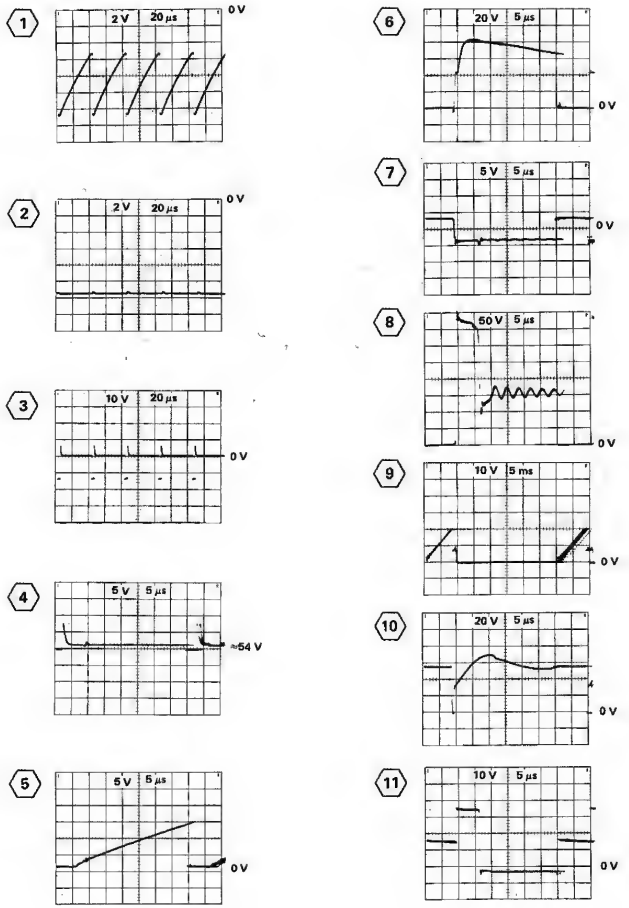

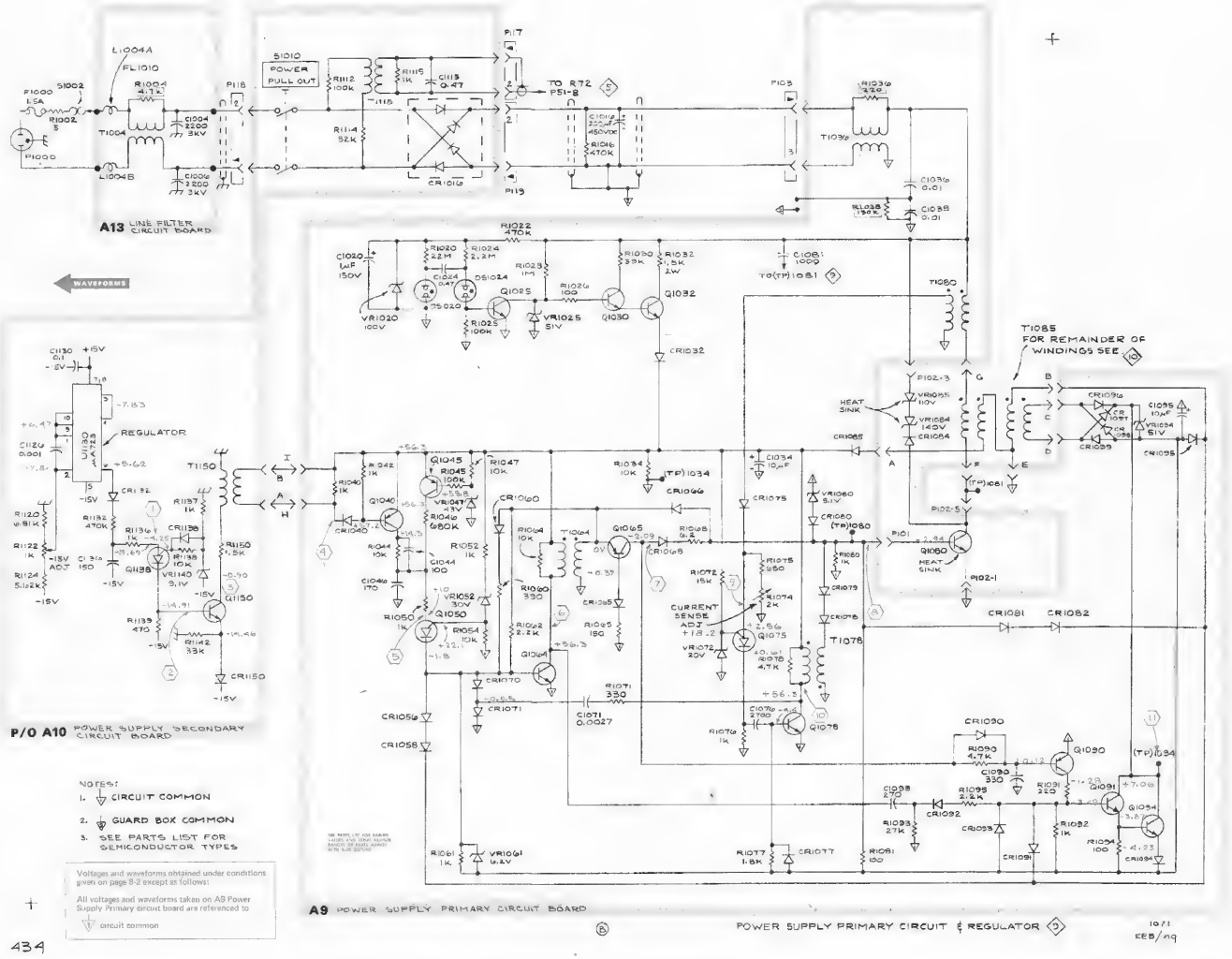

NOTES:
1. CIRCUIT COMMON
2. GUARD BOX COMMON
3. SEE PARTS LIST FOR SEMICONDUCTOR TYPES

Voltages and waveforms obtained under conditions given on page 8-2 except as follows:

All voltages and waveforms taken on A9 Power Supply Primary circuit board are referenced to circuit common

POWER SUPPLY PRIMARY CIRCUIT & REGULATOR

1071
EEB/ng

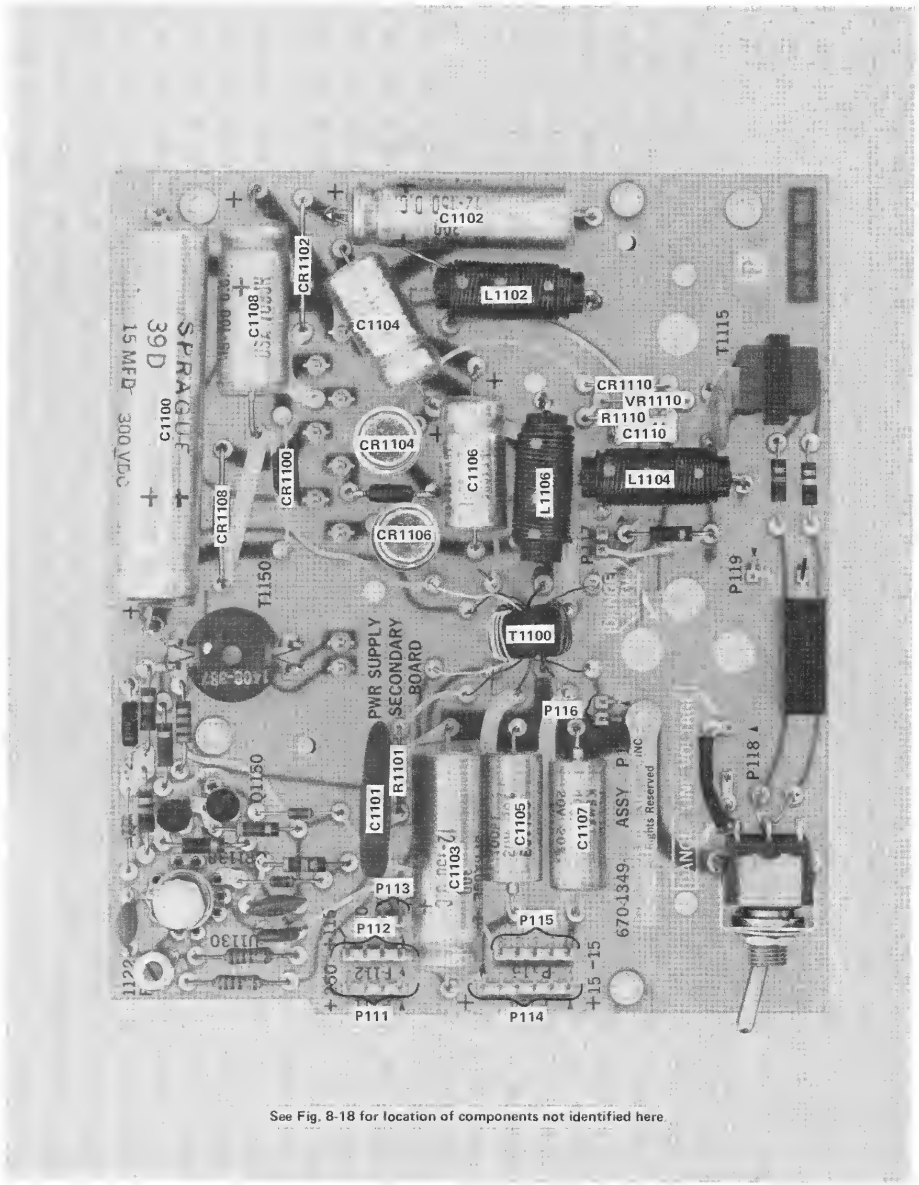

See Fig. 8-18 for location of components not identified here.

Fig. 8-20. P/O A10. Partial Power Supply Secondary circuit board. Ⓐ

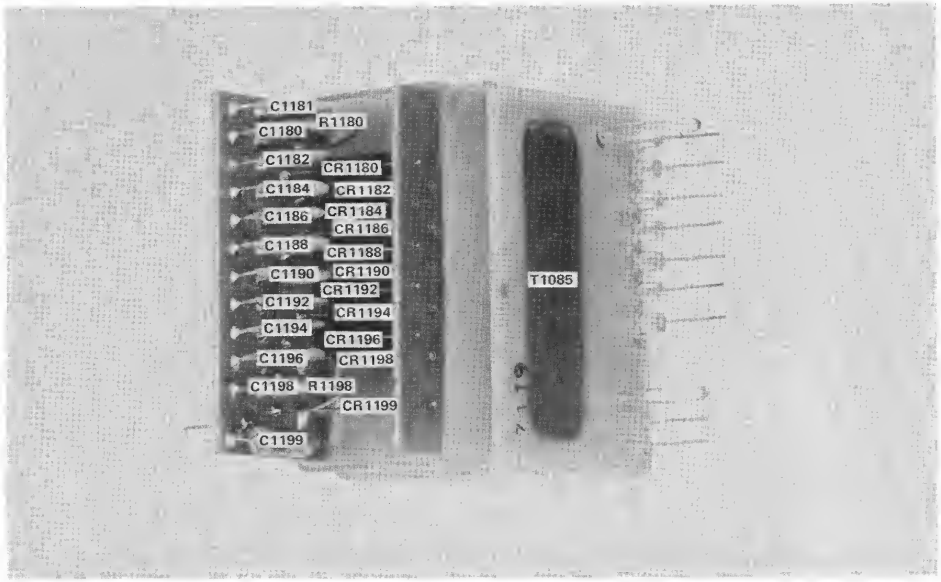

Fig. 8-21. A11 & A12. Transformer Primary and Secondary circuit boards. Ⓐ

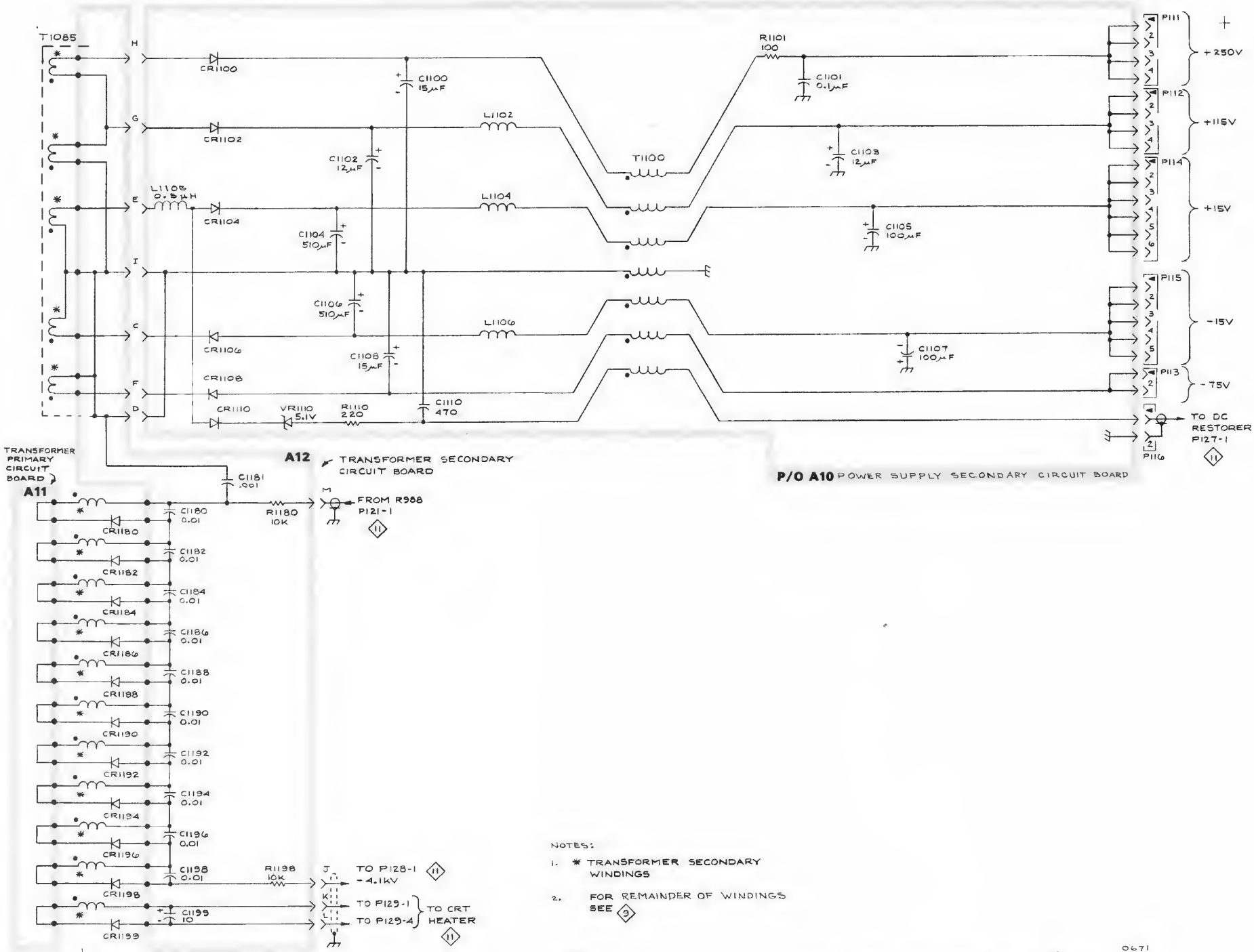
T1085
H
G
E
I
C
F
D
CR1100
CR1102
CR1104
CR1106
CR1108
CR1110
C1100 15μF
C1102 12μF
L1105 0.5μH
C1104 510μF
C1106 510μF
C1108 15μF
VR1110 5.1V
R1110 220
C1110 470
L1102
L1104
L1106
T1100
R1101 100
C1101 0.1μF
C1103 12μF
C1105 100μF
C1107 100μF
P111
+250V
P112
+115V
P114
+15V
P115
-15V
P113
-75V
P116
TO DC RESTORER P127-1
11
P/O A10 POWER SUPPLY SECONDARY CIRCUIT BOARD
A12 TRANSFORMER SECONDARY CIRCUIT BOARD
TRANSFORMER PRIMARY CIRCUIT BOARD
A11
C1181 .001
M
FROM R988 P121-1
R1180 10K
CR1180
C1180 0.01
CR1182
C1182 0.01
CR1184
C1184 0.01
CR1186
C1186 0.01
CR1188
C1188 0.01
CR1190
C1190 0.01
CR1192
C1192 0.01
CR1194
C1194 0.01
CR1196
C1196 0.01
CR1198
C1198 0.01
R1198 10K
J
TO P128-1 -4.1kV
11
K
TO P129-1
L
TO P129-4
TO CRT HEATER
11
CR1199
C1199 10
NOTES:
1. * TRANSFORMER SECONDARY WINDINGS
2. FOR REMAINDER OF WINDINGS SEE 9
POWER SUPPLY SECONDARY CIRCUIT 10
0671 /hq

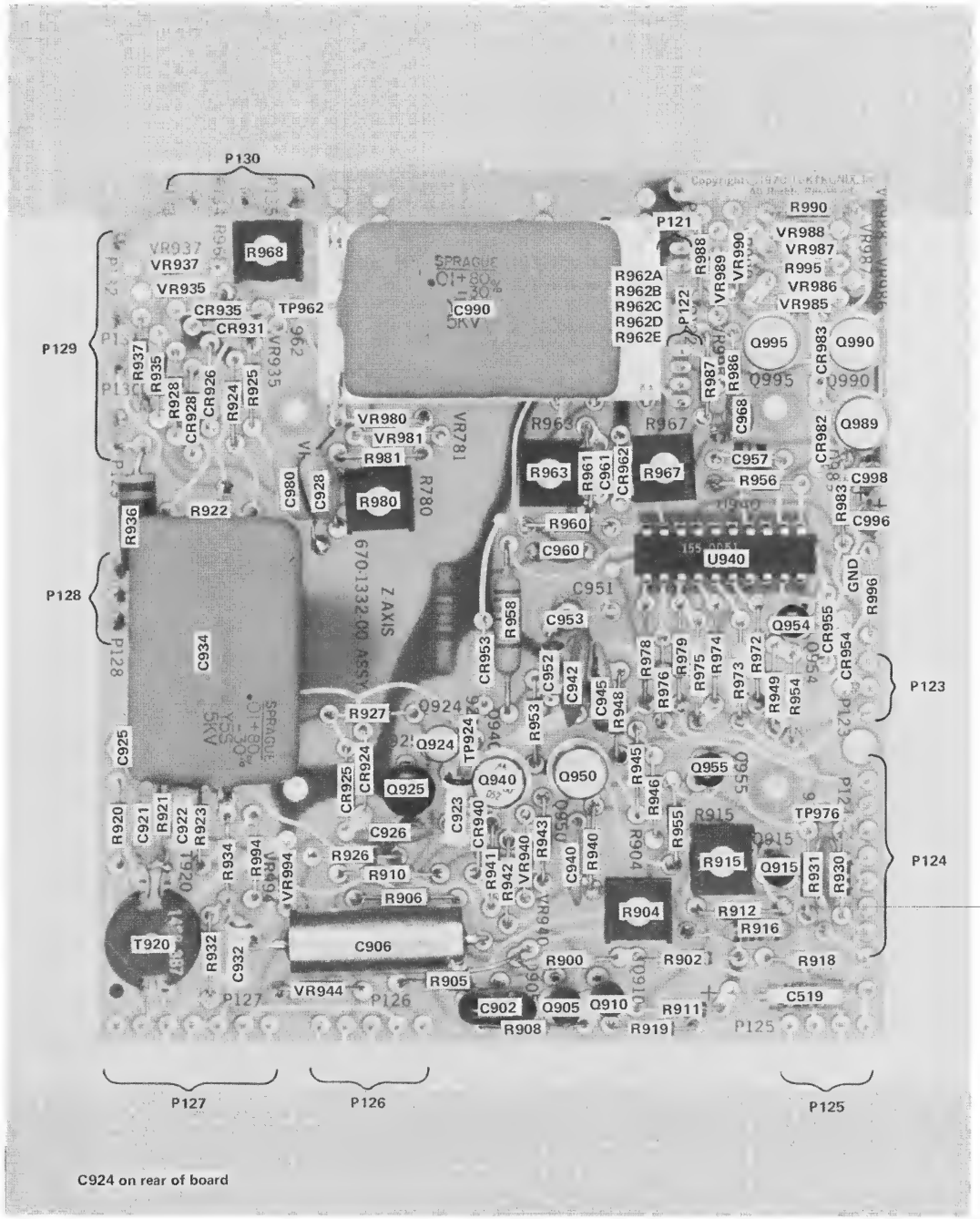

Fig. 8-22. A14. Z-Axis circuit board.

Ⓐ

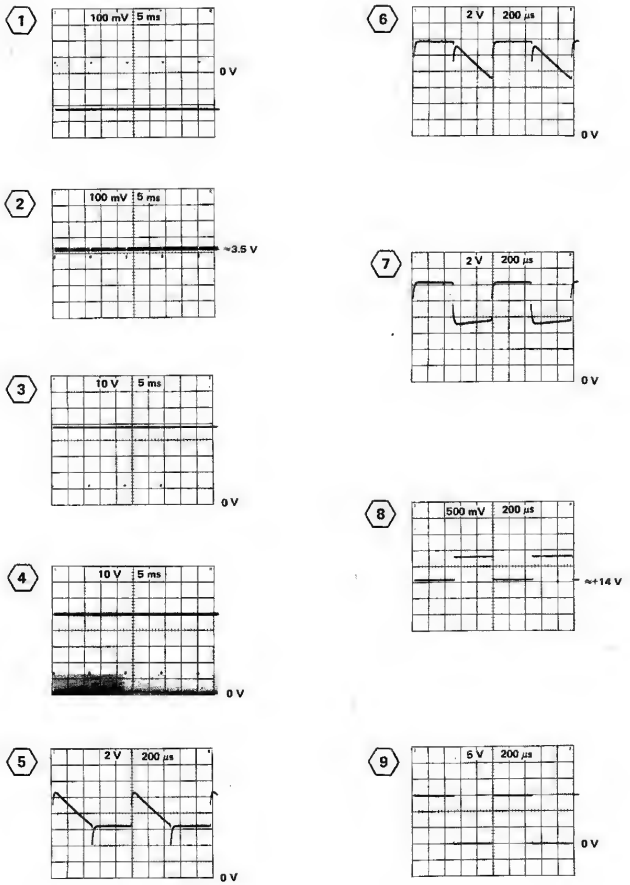
1
100 mV 5 ms
0 V
2
100 mV 5 ms
≈3.5 V
3
10 V 5 ms
0 V
4
10 V 5 ms
0 V
5
2 V 200 µs
0 V
6
2 V 200 µs
0 V
7
2 V 200 µs
0 V
8
500 mV 200 µs
≈+14 V
9
6 V 200 µs
0 V

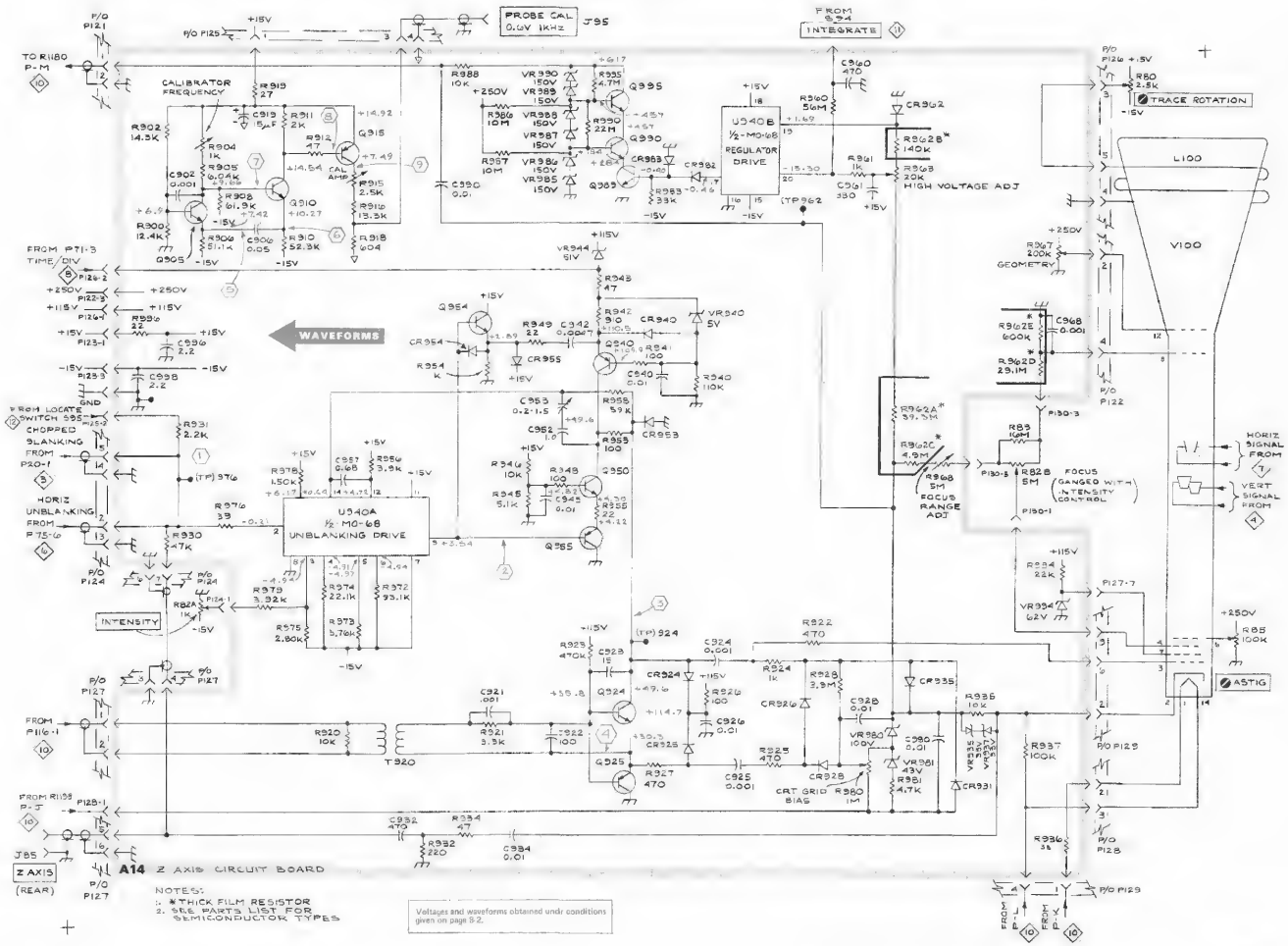
WAVEFORMS
A14 Z AXIS CIRCUIT BOARD
NOTES:
1. * THICK FILM RESISTOR
2. SEE PARTS LIST FOR SEMICONDUCTOR TYPES
Voltages and waveforms obtained under conditions given on page 8-2.
CRT CIRCUIT AND CALIBRATOR
0671 hg/EEB

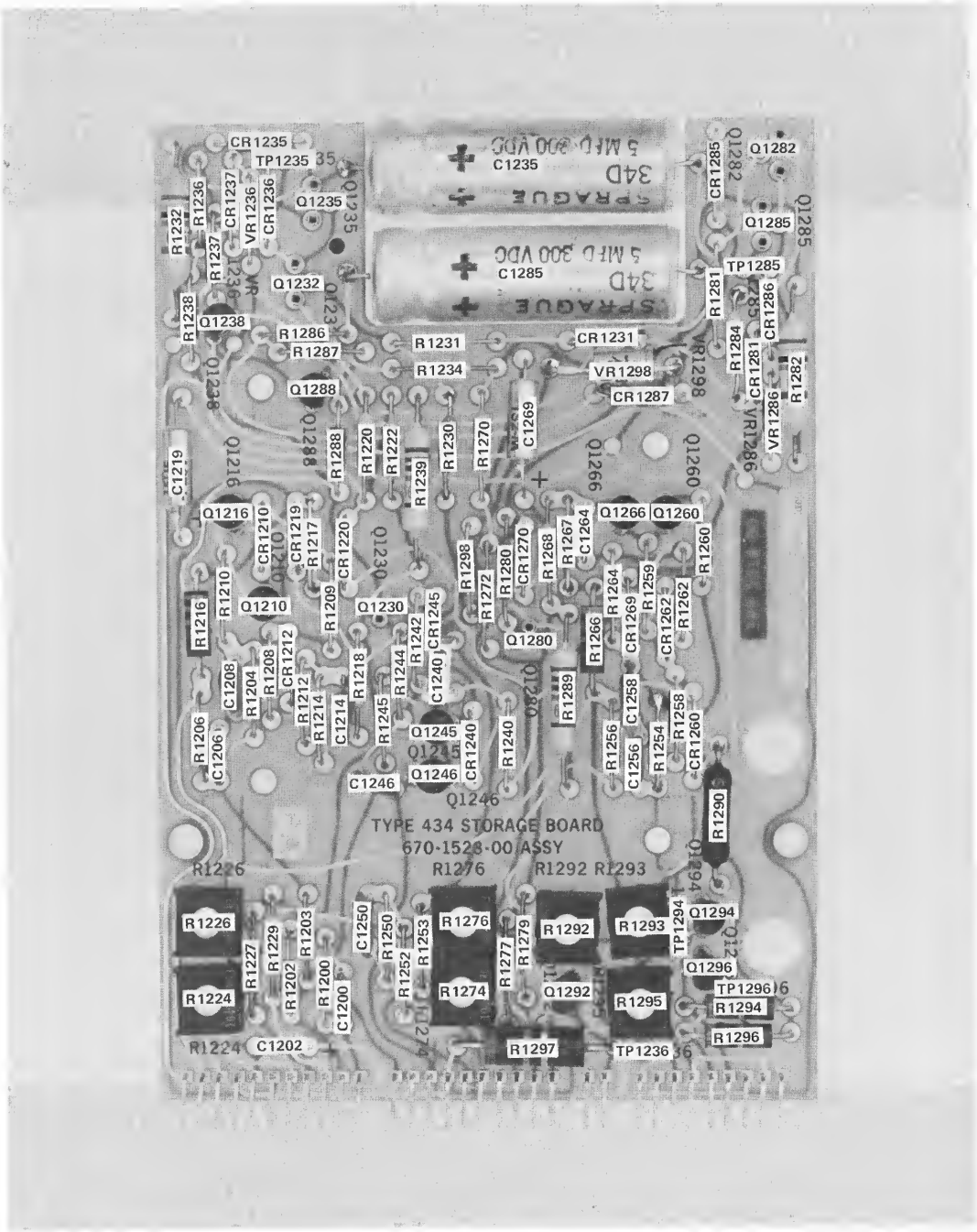

Fig. 8-23. A17. Storage circuit board.

Ⓐ

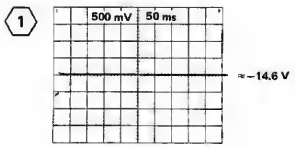
1
500 mV 50 ms
≈−14.6 V

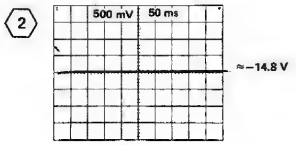
2
500 mV 50 ms
≈−14.8 V

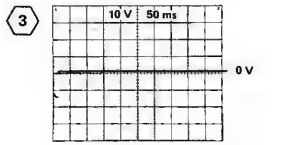
3
10 V 50 ms
0 V

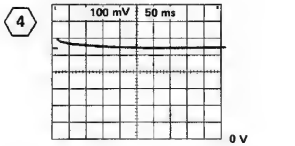
4
100 mV 50 ms
0 V

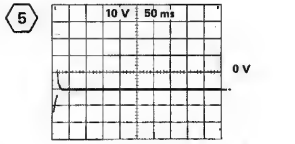
5
10 V 50 ms
0 V

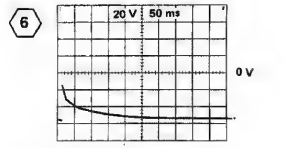
6
20 V 50 ms
0 V

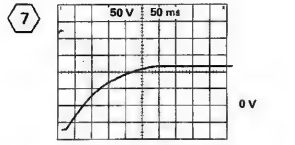
7
50 V 50 ms
0 V

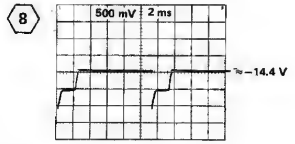
8
500 mV 2 ms
≈−14.4 V

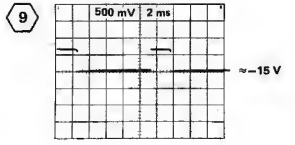
9
500 mV 2 ms
≈−15 V

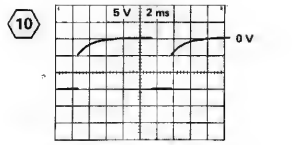
10
5 V 2 ms
0 V

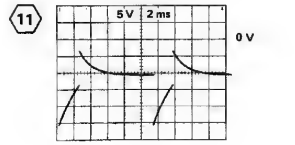
11
5 V 2 ms
0 V

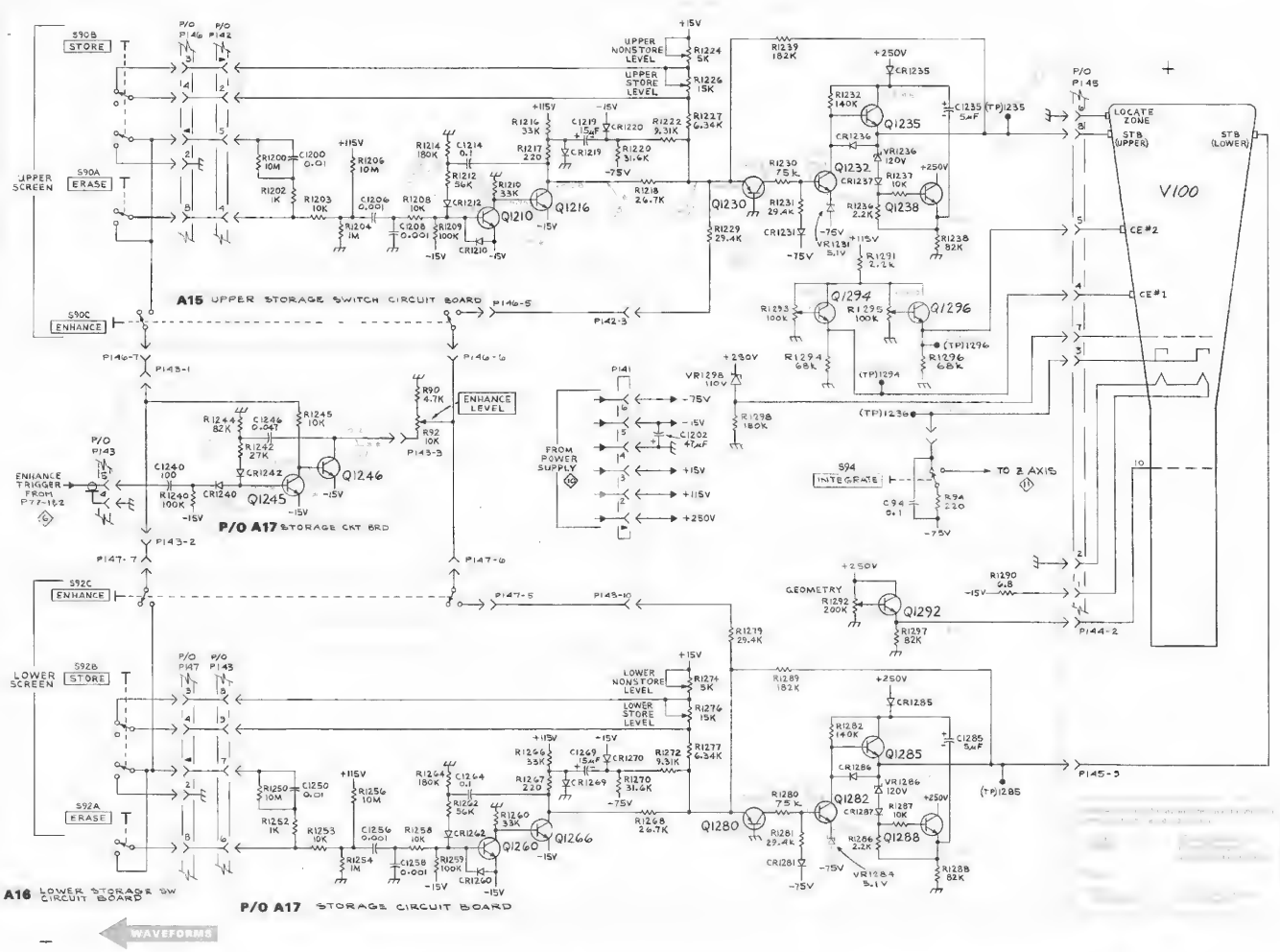
A15 UPPER STORAGE SWITCH CIRCUIT BOARD
P/O A17 STORAGE CKT BRD
A16 LOWER STORAGE SW CIRCUIT BOARD
P/O A17 STORAGE CIRCUIT BOARD
WAVEFORMS
V100
TO Z AXIS
FROM POWER SUPPLY
ENHANCE TRIGGER FROM P77-182
LOCATE ZONE
STB (UPPER)
STB (LOWER)
CE#2
CE#1
GEOMETRY
INTEGRATE

SECTION 9
MECHANICAL PARTS LIST

FIGURE 1 FRONT

Fig. & Index No.	Tektronix Part No.	Serial/Model No. Eff	Disc	Qty 1 2 3 4 5	Description
1-1	426-0721-00			1	FRAME, light filter, plastic
-2	378-0678-00			1	FILTER, light, CRT
-3	366-0493-01			2	KNOB, red—VARIABLE *(CH1 & CH2)*
	- - - - - -			-	each knob includes:
	213-0153-00			1	SETSCREW, 5-40 x 0.125 inch, HSS
-4	366-1281-00			2	NOB, gray—VOLTS/DIV *(CH1 & CH2)*
	- - - - - -			-	each knob includes:
	213-0153-00			2	SETSCREW, 5-40 x 0.125 inch, HSS
-5	366-1031-02			1	KNOB, red—VARIABLE
	- - - - - -			-	knob includes:
	213-0153-00			1	SETSCREW, 5-40 x 0.125 inch, HSS
-6	366-1279-00			1	KNOB, gray—TIME/DIV
	- - - - - -			-	knob includes:
	213-0153-00			2	SETSCREW, 5-40 x 0.125 inch, HSS
-7	366-1282-00			1	KNOB, push-on—BANDWIDTH
-8	366-1282-00			1	KNOB, push-on—INVERT
-9	366-1283-00			2	KNOB, gray—POSITION *(CH1 & CH2)*
	- - - - - -			-	each knob includes:
	213-0153-00			1	SETSCREW, 5-40 x 0.125 inch, HSS
-10	366-1038-00			1	KNOB, gray—POWER & INTENSITY
	- - - - - -			-	knob includes:
	213-0153-00			1	SETSCREW, 5-40 x 0.125 inch, HSS
-11	366-0494-00			1	KNOB, gray—POSITION
	- - - - - -			-	knob includes:
	213-0153-00			1	SETSCREW, 5-40 x 0.125 inch, HSS
-12	366-1278-00			1	KNOB, light gray—SLOPE
	- - - - - -			-	knob includes:
	213-0153-00			1	SETSCREW, 5-40 x 0.125 inch, HSS
-13	366-1280-00			1	KNOB, gray—LEVEL
	- - - - - -			-	knob includes:
	213-0153-00			1	SETSCREW, 5-40 x 0.125 inch, HSS
-14	366-1257-07			1	PUSHBUTTON—AUTO
	366-1257-05			1	PUSHBUTTON—NORM
-15	366-1257-08			1	PUSHBUTTON—EXT ATTEN
	366-1257-06			1	PUSHBUTTON—COMP
	366-1257-01			1	PUSHBUTTON—CH 1
-16	366-1257-02			3	PUSHBUTTON—AC
	366-1257-10			1	PUSHBUTTON—HF REJ
	366-1257-09			1	PUSHBUTTON—LF REJ

FIGURE 1 FRONT (cont)

Fig. & Index No.	Tektronix Part No.	Serial/Model No. Eff	Serial/Model No. Disc	Qty	1 2 3 4 5	Description
1-17	366-1257-03			2		PUSHBUTTON—GND
-18	366-1161-29			1		PUSHBUTTON—CH 1
	366-1161-31			1		PUSHBUTTON—ALT
	366-1161-27			1		PUSHBUTTON—ADD
	366-1161-30			1		PUSHBUTTON—CHOP
	366-1161-28			1		PUSHBUTTON—CH 2
-19	426-0681-00			12		FRAME, pushbutton, small
-20	426-0568-00			5		FRAME, pushbutton, large
-21	358-0378-00			2		BUSHING, sleeve, front panel trim, 0.187 inch
-22	358-0301-02			2		BUSHING, sleeve, front panel trim, 0.185 inch
-23	333-1413-00			1		PANEL, front
	- - - - - -			-		mounting hardware: *(not included w/panel)*
-24	211-0079-00			6		SCREW, 2-56 x 0.188 inch, PHS
-25	260-0735-00			2		SWITCH, push—BEAM FINDER & RESET, *w/hardware*
-26	358-0403-00			1		BUSHING, shaft, plastic
-27	200-0609-00			1		BASE, lampholder
-28	378-0541-00			1		FILTER, lens
-29	352-0084-00			1		HOLDER, neon, plastic, 0.65 inch long
-30	200-0935-00			4		CAP, lampholder
-31	331-0262-00			4		DIFFUSOR, light
-32	352-0157-00			4		LAMPHOLDER, plastic, 0.355 inch long
-33	378-0680-00			4		LENS, knob skirt
-34	348-0276-00			ft		SHIELDING GASKET, 2.80 feet long
-35	131-0679-00			2		CONNECTOR, receptacle, BNC, *w/hardware* .
-36	- - - - - -			5		RESISTOR, variable
	- - - - - -			-		mounting hardware for each: *(not included w/resistor)*
-37	210-0583-00			1		NUT, hex., 0.25-32 x 0.312 inch
-38	- - - - - -			2		RESISTOR, variable
	- - - - - -			-		mounting hardware for each: *(not included w/resistor)*
-39	358-0409-00			1		BUSHING, 0.25-32 x 0.159 ID
-40	210-0223-00			1		LUG, solder, 0.25 inch diameter, SE
-41	210-0471-00			1		POST, hex., 0.25-32 x 0.312 x 0.594 inch long
-42	210-0046-00			1		WASHER, lock, internal, 0.261 ID x 0.40 inch OD
-43	136-0098-01			1		JACK, tip, 0.25-32 x 0.562 inch long, *w/hardware*
	- - - - - -			-		mounting hardware: *(not included w/jack)*
-44	210-0223-00			1		LUG, solder, 0.25 inch diameter, SE
-45	260-1229-00			1		SWITCH, push—MODE
	- - - - - -			-		mounting hardware: *(not included w/switch)*
-46	211-0034-00			2		SCREW, 2-56 x 0.50 inch, PHS
-47	166-0251-00			2		TUBE, spacer, 0.125 x 0.297 inch long

FIGURE 1 FRONT (cont)

Fig. & Index No.	Tektronix Part No.	Serial/Model No. Eff	Disc	Qty 1 2 3 4 5	Description
1-48	670-1363-00			1	CIRCUIT BOARD ASSEMBLY—TRIGGER COUPLING A7
	- - - - - -			-	circuit board assembly includes:
	388-1922-00			1	CIRCUIT BOARD
-49	131-0589-00			3	TERMINAL, pin, 0.50 inch long
-50	260-1226-00			1	SWITCH, push, 2 button
-51	260-1224-00			1	SWITCH, push
	- - - - - -			-	mounting hardware: *(not included w/circuit board assembly)*
-52	211-0017-00			2	SCREW, 4-40 x 0.75 inch, RHS
-53	361-0368-00			2	SPACER, pushbutton switch
-54	670-1364-00			1	CIRCUIT BOARD ASSEMBLY—TRIGGER SOURCE A6
	- - - - - -			-	circuit board assembly includes:
	388-1923-00			1	CIRCUIT BOARD
-55	131-0589-00			10	TERMINAL, pin, 0.50 inch long
-56	260-1228-00			1	SWITCH, push, 2 button
-57	260-1224-00			1	SWITCH, push
-58	342-0096-00			1	INSULATOR, plate, push switch
-59	337-1455-00			1	SHIELD-CONTACT ASSEMBLY
	- - - - - -			-	shield-contact assembly includes:
	342-0094-00			1	INSULATOR, plate, plastic
-60	131-1086-00			2	CONTACT, ground
	- - - - - -			-	mounting hardware for each: *(not included w/contact)*
-61	211-0007-00			2	SCREW, 4-40 x 0.188 inch, PHS
-62	670-1358-00			1	CIRCUIT BOARD ASSEMBLY—VERTICAL MODE A3
	- - - - - -			-	circuit board assembly includes:
	388-1917-00			1	CIRCUIT BOARD
-63	131-0589-00			6	TERMINAL, pin, 0.50 inch long
-64	260-1227-00			2	SWITCH, push—AC GND
-65	260-1230-00			1	SWITCH, push—VERTICAL MODE
-66	337-1434-00			2	SHIELD, electrical
	- - - - - -			-	mounting hardware for each: *(not included w/shield)*
-67	210-0406-00			2	NUT, hex., 4-40 x 0.188 inch
-68	210-0288-00			2	TERMINAL, lug, 0.125 ID x 1.125 inches long
	210-0994-00			1	WASHER, flat, 0.125 ID x 0.25 inch OD
	- - - - - -			-	mounting hardware: *(not included w/circuit board assembly)*
-69	211-0116-00			2	SCREW, sems, 4-40 x 0.312 inch, PHB
-70	358-0363-00			3	BUSHING, for 0.25 inch shaft
	- - - - - -			-	mounting hardware for each: *(not included w/bushing)*
-71	220-0495-00			1	NUT, hex., 0.375-32 x 0.438 inch
-72	210-0840-00			1	WASHER, flat, 0.39 ID x 0.562 inch OD
-73	386-1854-01			1	SUBPANEL, front

FIGURE 1 FRONT (cont)

Fig. & Index No.	Tektronix Part No.	Serial/Model No. Eff	Serial/Model No. Disc	Qty	1 2 3 4 5	Description
1-74	670-1359-03			1		CIRCUIT BOARD ASSEMBLY—HORIZONTAL A8
	- - - - - -			-		circuit board assembly includes:
	388-1918-00			1		CIRCUIT BOARD
-75	131-0589-00			37		TERMINAL, pin, 0.50 inch long
-76	131-0604-00			24		CONTACT, electrical, cam switch
-77	136-0235-00			5		SOCKET, transistor, 6 pin
-78	136-0241-00			1		SOCKET, integrated circuit, 10 pin
-79	136-0252-04			87		SOCKET, pin connector
-80	214-0579-00			18		PIN, test point
	105-0262-00			1		ACTUATOR ASSEMBLY, cam switch
	- - - - - -			-		actuator assembly includes:
-81	200-1208-00			1		COVER, cam switch
	- - - - - -			-		mounting hardware: *(not included w/cover)*
-82	211-0079-00			6		SCREW, 2-56 x 0.188 inch, RHS
-83	210-0001-00			6		WASHER, lock, internal, 0.092 ID x 0.18 inch OD
-84	210-0405-00			6		NUT, hex., 2-56 x 0.188 inch
-85	344-0140-00			1		CLIP, spring tension, plastic
	- - - - - -			-		mounting hardware: *(not included w/clip)*
-86	211-0079-00			1		SCREW, 2-56 x 0.188 inch, RHS
-87	210-0001-00			1		WASHER, lock, internal, 0.092 ID x 0.18 inch OD
-88	210-0405-00			1		NUT, hex., 2-56 x 0.188 inch
-89	105-0232-00			1		STOP, stationary
	- - - - - -			-		mounting hardware: *(not included w/stop)*
-90	211-0079-00			2		SCREW, 2-56 x 0.188 inch, RHS
-91	210-0001-00			2		WASHER, lock, internal, 0.092 ID x 0.18 inch OD
-92	105-0233-00			1		STOP, rotary
-93	401-0056-00			1		BEARING, rear
	- - - - - -			-		mounting hardware: *(not included w/bearing)*
-94	210-0591-00			2		NUT, hex., 4-40 x 0.188 inch
-95	407-0653-00			1		BRACKET, center support
	- - - - - -			-		mounting hardware: *(not included w/bracket)*
	210-0591-00			2		NUT, hex., 4-40 x 0.188 inch
-96	105-0231-00			1		DRUM, sweep
-97	401-0064-00			2		BEARING, front
	- - - - - -			-		mounting hardware for each: *(not included w/bearing)*
	210-0591-00			2		NUT, hex., 4-40 x 0.188 inch
-98	214-1127-00			2		ROLLER, detent
-99	214-1139-00[1]			-		SPRING, flat, gold
	214-1139-02[1]			-		SPRING, flat, green
	214-1139-03[1]			-		SPRING, flat, red
-100	210-1131-00			1		WASHER, plastic, 0.375 ID x 0.562 inch OD
-101	376-0122-00			1		COUPLER, sweep
	- - - - - -			-		coupler includes:
	213-0153-00			1		SETSCREW, 5-40 x 0.125 inch, HSS
-102	384-0799-01			1		SHAFT, 5.948 inches long, w/driver

[1]**Replace only with part bearing the same color code as the original part in your instrument.**

®

FIGURE 1 FRONT (cont)

Fig. & Index No.	Tektronix Part No.	Serial/Model No. Eff	Serial/Model No. Disc	Qty	1 2 3 4 5	Description
1-103	214-1541-00			1		SPRING, helical compression
-104	376-0121-00			1		COUPLER, mag
	- - - - - -			-		coupler includes:
	213-0153-00			1		SETSCREW, 5-40 x 0.125 inch, HSS
-105	105-0230-00			1		DRUM, mag
-106	401-0056-01			1		BEARING, rear
	- - - - - -			-		mounting hardware: *(not included w/bearing)*
	210-0591-00			2		NUT, hex., 4-40 x 0.188 inch
-107	354-0390-00			1		RING, retaining
-108	- - - - - -			1		RESISTOR, variable
	- - - - - -			-		resistor includes:
	384-1084-00			1		SHAFT, extension
	- - - - - -			-		mounting hardware: *(not included w/resistor)*
-109	211-0079-00			2		SCREW, 2-56 x 0.188 inch, RHS
-110	210-0001-00			2		WASHER, lock, internal, 0.092 ID x 0.18 inch OD
-111	129-0301-00			2		POST, hex., 2-56 x 0.156 x 0.312 inch long
	- - - - - -			-		mounting hardware for each: *(not included w/post)*
-112	211-0079-00			1		SCREW, 2-56 x 0.188 inch, RHS
-113	210-0001-00			1		WASHER, lock, internal, 0.092 ID x 0.18 inch OD
-114	213-0153-00			1		SETSCREW, 5-40 x 0.312 inch, HSS
	- - - - - -			-		mounting hardware: *(not included w/actuator assembly)*
-115	211-0116-00			10		SCREW, sems, 4-40 x 0.312 inch, PHB
	- - - - - -			-		mounting hardware: *(not included w/circuit board assembly)*
	211-0116-00			3		SCREW, sems, 4-40 x 0.312 inch, PHB *(not shown)*
	119-0267-01			1		DELAY LINE ASSEMBLY
	- - - - - -			-		delay line assembly includes:
-116	200-1181-00			2		COVER HALF, plastic
	- - - - - -			-		mounting hardware: *(not included w/cover halves)*
-117	211-0097-00			3		SCREW, 4-40 x 0.312 inch, PHS
-118	210-0551-00			3		NUT, hex., 4-40 x 0.25 inch
-119	119-0267-00			1		DELAY LINE
-120	352-0198-00			2		HOLDER, terminal connector, 2 wire *(black)*
-121	352-0200-00			1		HOLDER, terminal connector, 4 wire *(black)*
-122	131-0621-00			4		CONNECTOR, terminal
	131-0622-00			4		CONNECTOR, terminal
-123	348-0003-00			1		GROMMET, rubber, 0.312 inch diameter
	- - - - - -			-		mounting hardware: *(not included w/delay line assembly)*
-124	211-0097-00			1		SCREW, 4-40 x 0.312 inch, PHB
-125	337-1424-00			1		SHIELD
	- - - - - -			-		mounting hardware: *(not included w/switch)*
-126	211-0189-00			2		SCREW, plastic, 4-40 x 0.875 inch, PH
-127	210-0869-00			2		WASHER, plastic, 0.156 ID x 0.375 inch OD
-128	361-0396-00			2		SPACER, sleeve, 0.125 ID x 0.25 OD x 0.55 inch long

FIGURE 1 FRONT (cont)

Fig. & Index No.	Tektronix Part No.	Serial/Model No. Eff	Disc	Qty	1 2 3 4 5	Description
1-129	670-1332-00			1		CIRCUIT BOARD ASSEMBLY—Z AXIS A14
	- - - - - -			-		circuit board assembly includes:
	388-1891-00			1		CIRCUIT BOARD
-130	131-0589-00			37		TERMINAL, pin, 0.50 inch long
	131-0608-00			7		TERMINAL, pin, 0.365 inch long
-131	136-0252-04			56		SOCKET, connector pin
-132	214-0579-00			3		PIN, test point
	- - - - - -			-		mounting hardware: *(not included w/circuit board assembly)*
-133	211-0116-00			2		SCREW, sems, 4-40 x 0.312 inch, PHB
-134	407-0905-00			2		BRACKET, storage circuit board
-135	407-0875-00			2		BRACKET, Z-axis circuit board
	- - - - - -			-		mounting hardware for each: *(not included w/bracket)*
-136	211-0511-00			1		SCREW, 6-32 x 0.50 inch, PHS
	211-0514-00			1		SCREW, 6-32 x 0.75 inch, PHS
-137	220-0444-00			2		NUT, square, 6-32 x 0.25 inch
-138	386-1903-00			4		SUPPORT, CRT, plastic
	- - - - - -			-		mounting hardware for each: *(not included w/support)*
-139	212-0084-00			1		SCREW, 8-32 x 0.312 inch, HHS
-140	210-0805-00			1		WASHER, flat, 0.204 ID x 0.438 inch OD
-141	348-0006-00			1		GROMMET, rubber, 0.75 inch diameter
-142	255-0334-00			ft		PLASTIC CHANNEL, 0.187 foot long
-143	343-0123-01			2		CLAMP, electron tube retainer
	- - - - - -			-		mounting hardware: *(not included w/clamp)*
-144	211-0600-00			1		SCREW, 6-32 x 2 inches, Fil HS
-145	220-0444-00			1		NUT, square, 6-32 x 0.25 inch
-146	343-0124-00			1		CLAMP, electron tube retainer
	- - - - - -			-		mounting hardware: *(not included w/clamp)*
-147	211-0599-00			2		SCREW, 6-32 x 0.75 inch, Fil HS
-148	220-0444-00			2		NUT, square, 6-32 x 0.25 inch
-149	352-0091-01			2		HOLDER, electron tube retainer
	- - - - - -			-		mounting hardware for each: *(not included w/holder)*
-150	211-0590-00			2		SCREW, 6-32 x 0.25 inch, PHB

FIGURE 1 FRONT (cont)

Fig. & Index No.	Tektronix Part No.	Serial/Model No. Eff	Disc	Qty	1 2 3 4 5 Description
1-151	386-1923-00			1	SUPPORT, CRT shield, rear
	- - - - - -			-	mounting hardware: *(not included w/support)*
	211-0504-00			2	SCREW, 6-32 x 0.25 inch, PHS *(not shown)*
	210-0202-00			1	LUG, solder, SE #6 *(not shown)*
-152	342-0080-00			1	INSULATOR, strip, 1 x 8.50 inches
-153	252-0571-00			ft	EXTRUSION, 0.708 foot long
-154	337-1383-00			1	SHIELD, CRT
	- - - - - -			-	mounting hardware: *(not included w/shield)*
	211-0507-00			2	SCREW, 6-32 x 0.312 inch, PHS
	210-0006-00			2	WASHER, lock, internal, 0.146 ID x 0.283 inch OD
-155	670-1523-00			1	CIRCUIT BOARD ASSEMBLY—STORAGE A17
	- - - - - -			-	circuit board ossembly includes:
	388-2078-00			1	CIRCUIT BOARD
-156	131-0589-00			32	TERMINAL, pin, 0.50 inch long
-157	214-0579-00			5	PIN, test point
-158	136-0252-04			48	SOCKET, pin connector
	- - - - - -			-	mounting hardware: *(not included w/circuit board assembly)*
-159	211-0116-00			4	SCREW, sems, 4-40 x 0.312 inch, PHB
-160	670-1524-00			1	CIRCUIT BOARD ASSEMBLY, switch—UPPER STORAGE A15
	- - - - - -			-	circuit board assembly includes:
-161	131-0589-00			8	TERMINAL, pin, 0.50 inch long
	- - - - - -			-	mounting hardware: *(not included w/circuit board assembly)*
-162	211-0156-00			2	SCREW, 1-72 x 0.25 inch, 82° csk, FHS
-163	670-1525-00			1	CIRCUIT BOARD ASSEMBLY, switch—LOWER STORAGE A16
	- - - - - -			-	circuit board ossembly includes:
-164	131-0589-00			8	TERMINAL, pin, 0.50 inch long
	- - - - - -			-	mounting hardware: *(not included w/circuit board assembly)*
-165	211-0156-00			2	SCREW, 1-72 x 0.25 inch, 82° csk, FHS
-166	366-1059-00			1	KNOB, gray, push-on—LOCATE
-167	366-1334-00			1	KNOB, charcoal—ENHANCE
	- - - - - -			-	knob includes:
	213-0153-00			1	SETSCREW, 5-40 x 0.125 inch, HSS
-168	260-1285-00			1	SWITCH, push—INTEGRATED, w/hardware
	- - - - - -			-	mounting hardware: *(not included w/switch)*
-169	210-0223-00			1	TERMINAL, lug, 0.25 inch diometer, SE

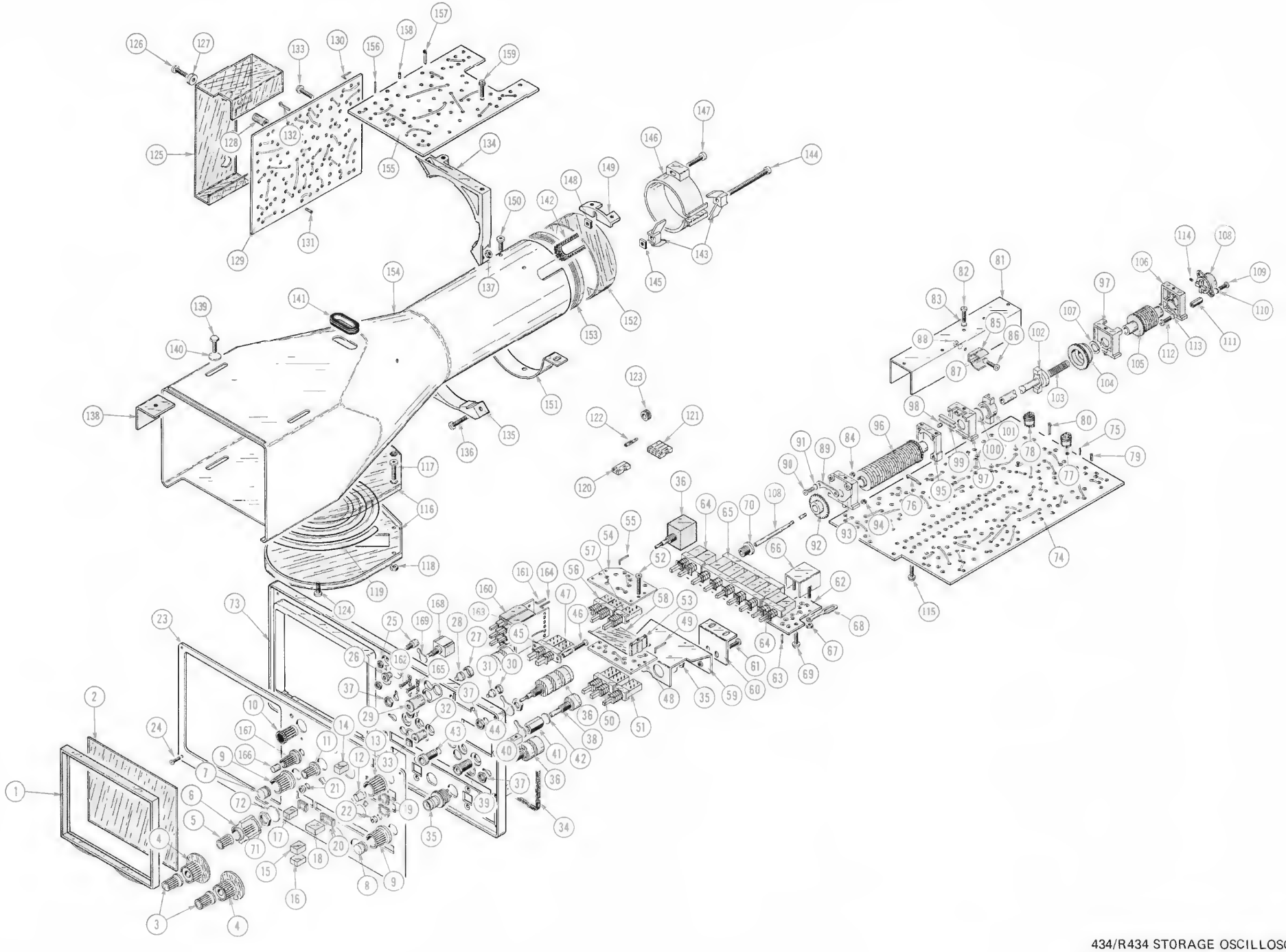

434/R434 STORAGE OSCILLOSCOPE

FIG. 1 Front

FIGURE 2 CHASSIS, REAR & STANDARD ACCESSORIES

Fig. & Index No.	Tektronix Part No.	Serial/Model No. Eff	Disc	Qty	Description 1 2 3 4 5
2-	119-0295-00			1	LINE FILTER ASSEMBLY
	- - - - - -			-	line filter assembly includes:
-1	388-1890-00			1	CIRCUIT BOARD—LINE FILTER A13
	- - - - - -			-	mounting hardware: *(not included w/circuit board)*
-2	210-0405-00			2	NUT, hex., 2-56 x 0.188 inch
-3	211-0128-00			2	SCREW, 2-56 x 1.375 inch, PHS
-4	- - - - - -			1	RESISTOR
	- - - - - -			-	mounting hardware: *(not included w/resistor)*
-5	213-0107-00			1	SCREW, thread forming, 4-40 x 0.25 inch, 100°csk, FHS
-6	210-0201-00			2	LUG, solder, SE #4
	- - - - - -			-	mounting hardware: *(not included w/lugs)*
-7	211-0007-00			1	SCREW, 4-40 x 0.188 inch, PHS
-8	210-0406-00			1	NUT, hex., 4-40 x 0.188 inch
-9	348-0031-00			2	GROMMET, plastic, 0.25 inch diameter
-10	441-0983-00			1	CHASSIS
	- - - - - -			-	mounting hardware: *(not included w/line filter assembly)*
-11	211-0007-00			2	SCREW, 4-40 x 0.188 inch, PHS
-12	- - - - - -			1	SWITCH, thermostatic
	- - - - - -			-	mounting hardware: *(not included w/switch)*
-13	211-0008-00			2	SCREW, 4-40 x 0.25 inch, PHS
-14	131-0955-00			3	CONNECTOR, receptacle, BNC, *w/hardware*
	- - - - - -			-	mounting hardware for each: *(not included w/connector)*
-15	210-0255-00			1	TERMINAL, lug
-16	- - - - - -			2	RESISTOR, variable
	- - - - - -			-	mounting hardware for each: *(not included w/resistor)*
-17	358-0251-00			1	BUSHING, 0.25-32 x 0.424 inch long
-18	210-0046-00			1	WASHER, lock, internal, 0.261 ID x 0.40 inch OD
-19	200-0103-00			1	NUT, knurled, 0.25-28 x 0.375 inch OD
-20	355-0507-00			1	STEM, binding post
	- - - - - -			-	mounting hardware: *(not included w/stem)*
-21	210-0583-00			1	NUT, hex., 0.25-32 x 0.312 inch
-22	210-0046-00			1	WASHER, lock, internal, 0.261 ID x 0.40 inch OD
-23	386-1927-00			1	PANEL, rear
	- - - - - -			-	mounting hardware: *(not included w/panel)*
-24	211-0065-00			6	SCREW, 4-40 x 0.188 inch, PHS

FIGURE 2 CHASSIS, REAR & STANDARD ACCESSORIES (cont)

Fig. & Index No.	Tektronix Part No.	Serial/Model No. Eff	Serial/Model No. Disc	Qty	Description
					1 2 3 4 5
2-25	352-0014-00			1	FUSEHOLDER, *w/hardware*
	- - - - - -			-	mounting hardware: *(not included w/fuseholder)*
-26	210-0873-00			1	WASHER, rubber, 0.50 ID x 0.688 inch OD
-27	352-0260-00			2	HOLDER, power cord
-28	161-0033-06			1	CABLE ASSEMBLY, power
	- - - - - -			-	mounting hardware: *(not included w/cable assembly)*
-29	210-0413-00			1	NUT, hex., 0.375-32 x 0.50 inch
	210-0012-00			1	WASHER, lock, internal, 0.375 ID x 0.50 inch OD
-30	337-1401-00			1	SHIELD, electrical
	- - - - - -			-	shield includes:
-31	342-0074-00			1	INSULATOR, plate
	- - - - - -			-	mounting hardware: *(not included w/shield)*
-32	211-0007-00			4	SCREW, 4-40 x 0.188 inch, PHS
-33	407-0935-00			1	BRACKET, angle, 3.725 inches
	- - - - - -			-	mounting hardware: *(not included w/bracket)*
-34	211-0008-00			2	SCREW, 4-40 x 0.25 inch, PHS
-35	337-1412-00			1	SHIELD, electrical
-36	407-0934-00			1	BRACKET, angle, 2.60 inches
	- - - - - -			-	mounting hardware: *(not included w/bracket)*
-37	211-0105-00			2	SCREW, 4-40 x 0.188 inch, 100° csk, FHS
-38	670-1349-02			1	CIRCUIT BOARD ASSEMBLY—SECONDARY POWER SUPPLY A10
	- - - - - -			-	circuit board assembly includes:
	388-1908-00			1	CIRCUIT BOARD
-39	131-0608-00			29	TERMINAL, pin, 0.365 inch
-40	136-0252-04			16	SOCKET, pin connector
-41	136-0263-03			9	SOCKET, terminal, pin
-42	260-0834-00			1	SWITCH, toggle, power
	- - - - - -			-	mounting hardware: *(not included w/switch)*
-43	210-0562-00			1	NUT, hex., 0.25-40 x 0.312 inch
-44	210-0905-00			1	WASHER, flat, 0.256 ID x 0.438 inch OD
-45	210-0046-00			1	WASHER, lock, internal, 0.261 ID x 0.40 inch OD
-46	407-0936-00			1	BRACKET, component mounting
	- - - - - -			-	mounting hardware: *(not included w/circuit board assembly)*
-47	211-0180-00			4	SCREW, sems, 2-56 x 0.25 inch, PHB
	210-1139-00			2	TERMINAL, lug, 0.99 inch ID, SE
-48	342-0068-00			1	INSULATOR, plate, circuit board
-49	441-1011-00			1	CHASSIS, circuit board

FIGURE 2 CHASSIS, REAR & STANDARD ACCESSORIES (cont)

Fig. & Index No.	Tektronix Part No.	Serial/Model No. Eff	Disc	Qty	1 2 3 4 5	Description
2-50	342-0089-00			1		INSULATOR, transformer, top front
-51	- - - - - -			1		TRANSFORMER
-52	342-0090-00			1		INSULATOR, transformer, bottom front
-53	337-1448-00			1		SHIELD ASSEMBLY
	- - - - - -			-		mounting hardware: *(not included w/shield assembly)*
-54	211-0008-00			4		SCREW, 4-40 x 0.25 inch, PHS
	211-0007-00			2		SCREW, 4-40 x 0.188 inch, PHS
-55	407-0933-00			1		BRACKET, angle, power supply capacitor
	- - - - - -			-		mounting hardware: *(not included w/bracket)*
-56	210-0586-00			3		NUT, keps, 4-40 x 0.25 inch
-57	348-0003-00			1		GROMMET, rubber, 0.312 inch diameter
-58	337-1411-00			1		SHIELD, electrical, power supply
	- - - - - -			-		mounting hardware: *(not included w/shield)*
-59	211-0008-00			1		SCREW, 4-40 x 0.25 inch, PHS
-60	670-1350-00			1		CIRCUIT BOARD ASSEMBLY—PRIMARY POWER SUPPLY A9
	- - - - - -			-		circuit board assembly includes:
	388-1909-00			1		CIRCUIT BOARD
-61	131-0589-00			6		TERMINAL, pin, 0.50 inch long
-62	136-0263-03			9		SOCKET, pin terminal
-63	136-0252-04			39		SOCKET, pin connector
-64	214-0579-00			4		PIN, test point
-65	384-0536-00			2		ROD, plastic
	- - - - - -			-		mounting hardware for each: *(not included w/rod)*
-66	211-0040-00			2		SCREW, plastic, 4-40 x 0.25 inch
	- - - - - -			-		mounting hardware: *(not included w/circuit board assembly)*
-67	211-0180-00			3		SCREW, sems, 2-56 x 0.25 inch, PHB
-68	129-0198-00			1		POST, hex., 4-40 x 0.188 x 0.74 inch long
	- - - - - -			-		mounting hardware: *(not included w/post)*
-69	210-0004-00			1		WASHER, lock, internal, 0.12 ID x 0.26 inch OD
-70	342-0086-00			1		INSULATOR, plate, primary circuit board
-71	214-1528-00			1		HEATSINK, transistor, top
	- - - - - -			-		mounting hardware: *(not included w/heatsink)*
-72	211-0630-00			2		SCREW, 6-32 x 1.125 inches, 100° csk, FHS
-73	210-0407-00			2		NUT, hex., 6-32 x 0.25 inch
-74	342-0063-00			2		INSULATOR, bushing, plastic, 0.835 inch long
-75	- - - - - -			1		TRANSISTOR
	- - - - - -			-		mounting hardware: *(not included w/transistor)*
-76	211-0510-00			2		SCREW, 6-32 x 0.375 inch, PHS
-77	210-0202-00			1		LUG, solder, SE #6
-78	210-0457-00			2		NUT, keps, 6-32 x 0.312 inch

FIGURE 2 CHASSIS, REAR & STANDARD ACCESSORIES (cont)

Fig. & Index No.	Tektronix Part No.	Serial/Model No. Eff	Serial/Model No. Disc	Qty	1 2 3 4 5	Description
2-79	214-1672-00			2		SPRING, helical compression, 0.25 inch long
-80	214-1527-00			1		HEATSINK HALF, transistor, bottom
-81	337-1451-00			1		SHIELD, electrical, primary circuit board, rear
-82	342-0067-00			1		INSULATOR-HEATSINK, power supply
-83	426-0708-01			1		SUBPANEL, rear
	- - - - - -			-		mounting hardware: *(not included w/subpanel)*
-84	212-0023-00			1		SCREW, 8-32 x 0.375 inch, PHS
-85	212-0040-00			2		SCREW, 8-32 x 0.375 inch, 100° csk, FHS
-86	220-0595-00			2		NUT BLOCK, 8-32 inch thread
	- - - - - -			-		mounting hardware for each: *(not included w/nut block)*
-87	211-0538-00			1		SCREW, 6-32 x 0.312 inch, 100° csk, FHS
-88	220-0444-00			1		NUT, square, 6-32 x 0.25 inch
-89	220-0595-00			2		NUT BLOCK, 8-32 inch thread
	- - - - - -			-		mounting hardware for each: *(not included w/nut block)*
-90	211-0507-00			1		SCREW, 6-32 x 0.312 inch, PHS
-91	220-0444-00			1		NUT, square, 6-32 x 0.25 inch
-92	220-0595-00			1		NUT BLOCK, 8-32 inch thread
	- - - - - -			-		mounting hardware: *(not included w/nut block)*
-93	211-0531-00			1		SCREW, 6-32 x 0.375 inch, Fil HS
-94	210-0202-00			1		LUG, solder, SE #6
-95	131-0775-00			1		TERMINAL, stud
-96	131-0775-00			3		TERMINAL, stud
	- - - - - -			-		mounting hardware for each: *(not included w/terminal)*
-97	211-0503-00			1		SCREW, 6-32 x 0.188 inch, PHS
-98	129-0006-00			4		POST, connecting
	- - - - - -			-		mounting hardware for each: *(not included w/post)*
-99	210-0457-00			1		NUT, keps, 6-32 x 0.312 inch
-100	407-0884-00			1		BRACKET, angle, 2.60 inches
	- - - - - -			-		mounting hardware: *(not included w/bracket)*
-101	211-0101-00			1		SCREW, 4-40 x 0.25 inch, 100° csk, FHS
-102	211-0097-00			2		SCREW, 4-40 x 0.312 inch, PHS
-103	337-1358-00			1		SHIELD, electrical, power supply, front
	- - - - - -			-		mounting hardware: *(not included w/shield)*
-104	213-0146-00			2		SCREW, thread forming, 6-20 x 0.312 inch, PHS

FIGURE 2 CHASSIS, REAR & STANDARD ACCESSORIES (cont)

Fig. & Index No.	Tektronix Part No.	Serial/Model No. Eff	Serial/Model No. Disc	Qty	Description
2-105	- - - - - -			2	COIL
	- - - - - -			-	mounting hardware for each: *(not included w/coil)*
-106	211-0504-00			1	SCREW, 6-32 x 0.25 inch, PHS
-107	407-0885-00			1	BRACKET, coil
	- - - - - -			-	mounting hardware: *(not included w/bracket)*
-108	211-0504-00			1	SCREW, 6-32 x 0.25 inch, PHS
-109	348-0055-00			2	GROMMET, plastic, 0.25 inch
-110	343-0089-00			2	CLAMP, cable, snap-on
-111	358-0215-00			3	BUSHING, plastic
-112	386-1922-00			1	PANEL, rear
	- - - - - -			-	mounting hardware: *(not included w/panel)*
-113	211-0065-00			7	SCREW, 4-40 x 0.188 inch, PHS
-114	214-1138-00			2	HEATSINK, 1 inch diameter
	- - - - - -			-	mounting hardware for each: *(not included w/heatsink)*
-115	211-0012-00			2	SCREW, 4-40 x 0.375 inch, PHS
-116	210-0406-00			2	NUT, hex., 4-40 x 0.188 inch
-117	210-0599-00			2	NUT, sleeve, 4-40 x 0.391 inch long
-118	214-0368-00			1	SPRING, 0.24 inch diameter
-119	343-0097-00			1	CLAMP, heat sink, plastic
-120	210-0627-00			1	RIVET
-121	352-0262-00			1	HOLDER, transistor, heatsink
	210-0201-00			1	LUG, solder, SE #4
-122	200-0608-00			1	COVER, variable resistor, plastic
-123	- - - - - -			1	RESISTOR, variable
	- - - - - -			-	mounting hardware: *(not included w/resistor)*
-124	210-0562-00			1	NUT, hex., 0.25-40 x 0.312 inch
-125	348-0031-00			1	GROMMET, plastic, 0.156 inch diameter
-126	407-0888-00			1	BRACKET, angle, intensity control
	- - - - - -			-	mounting hardware: *(not included w/bracket)*
-127	210-0457-00			2	NUT, keps, 6-32 x 0.312 inch
-128	210-0201-00			1	LUG, solder, SE #4
	- - - - - -			-	mounting hardware: *(not included w/lug)*
-129	210-0406-00			1	NUT, hex., 4-40 x 0.188 inch
-130	376-0092-01			1	COUPLER HALF, shaft
	- - - - - -			-	coupler half includes:
	213-0076-00			2	SETSCREW, 2-56 x 0.125 inch, HSS

FIGURE 2 CHASSIS, REAR & STANDARD ACCESSORIES (cont)

Fig. & Index No.	Tektronix Part No.	Serial/Model No. Eff	Serial/Model No. Disc	Qty	1 2 3 4 5	Description
2-131	376-0092-03			1		COUPLER HALF, shaft
	- - - - - -			-		coupler half includes:
	213-0076-00			2		SETSCREW, 2-56 x 0.125 inch, HSS
-132	384-1053-00			1		SHAFT, extension, 2.741 inches long
-133	384-1083-00			1		SHAFT, extension, power switch
-134	376-0118-00			1		COUPLER, extension shaft, power switch
	- - - - - -			-		mounting hardware: *(not included w/coupler)*
-135	210-0449-00			2		NUT, hex., 5-40 x 0.25 inch
-136	210-0288-00			1		TERMINAL, lug, 0.125 ID x 1.125 inches long
	- - - - - -			-		mounting hardware: *(not included w/terminal)*
-137	211-0065-00			1		SCREW, 4-40 x 0.188 inch, PHS
-138	210-0586-00			1		NUT, keps, 4-40 x 0.25 inch
-139	384-1051-00			2		SHAFT, extension, 5.555 inches long
-140	376-0029-00			2		COUPLING, shaft, 0.312 x 0.50 inch long
	- - - - - -			-		coupling includes:
	213-0075-00			1		SETSCREW, 4-40 x 0.094 inch long
-141	384-1052-00			1		SHAFT, extension, 8.05 inches long
-142	384-1066-00			1		SHAFT, extension, 6.20 inches long
-143	376-0114-00			2		COUPLER, plastic, pushbutton switch
	- - - - - -			-		each coupler includes:
	213-0140-00			2		SETSCREW, 2-56 x 0.094 inch, HSS
-144	337-1452-00			1		SHIELD, electrical
-145	210-0201-00			1		LUG, solder, SE #4
	- - - - - -			-		mounting hardware: *(not included w/lug)*
-146	211-0007-00			1		SCREW, 4-40 x 0.188 inch, PHS
-147	210-0004-00			1		WASHER, lock, internal, 0.12 ID x 0.26 inch OD
-148	210-0551-00			1		NUT, hex., 4-40 x 0.25 inch
	672-0019-00			1		CIRCUIT BOARD ASSEMBLY—ATTENUATOR
	- - - - - -			-		circuit board assembly includes:
-149	200-1199-00			2		COVER, attenuator chassis
	- - - - - -			-		mounting hardware for each: *(not included w/cover)*
-150	211-0008-00			4		SCREW, 4-40 x 0.25 inch, PHS
-151	210-0851-00			4		WASHER, flat, 0.119 ID x 0.375 inch OD
-152	337-1418-01			4		SHIELD, electrical, stiffener
	- - - - - -			-		mounting hardware for each: *(not included w/shield)*
-153	213-0120-00			3		SCREW, thread forming, 2-32 x 0.25 inch, PHS
-154	210-0053-00			3		WASHER, lock, split, 0.092 ID x 0.175 inch OD
-155	210-1008-00			3		WASHER, flat, 0.090 ID x 0.188 inch OD

FIGURE 2 CHASSIS, REAR & STANDARD ACCESSORIES (cont)

Fig. & Index No.	Tektronix Part No.	Serial/Model No. Eff	Serial/Model No. Disc	Qty	1 2 3 4 5	Description
2-156	131-1031-00			8		CONTACT ASSEMBLY, top
-157	670-1357-00			1		CIRCUIT BOARD ASSEMBLY—INPUT AMP A1
	- - - - - -			-		circuit board assembly includes:
	388-1916-00			1		CIRCUIT BOARD
-158	131-0589-00			8		TERMINAL, pin, 0.50 inch long
-159	136-0252-04			18		SOCKET, pin connector
-160	136-0263-03			2		SOCKET, terminol pin
-161	337-1415-00			1		SHIELD, electrical, circuit board
	- - - - - -			-		mounting hardware: *(not included w/circuit board assembly)*
-162	211-0116-00			2		SCREW, sems, 4-40 x 0.312 inch, PHB
-163	388-1915-00			2		CIRCUIT BOARD, ATTENUATOR (CH 1-A4, CH 2-A5)
-164	441-0984-00			2		CHASSIS
	- - - - - -			-		mounting hardware for each: *(not included w/chassis)*
-165	129-0299-00			4		POST, hex., 4-40 x 0.188 x 0.333 inch long
-166	210-0004-00			4		WASHER, lock, internal, 0.12 ID x 0.26 inch OD
-167	211-0001-00			3		SCREW, 2-56 x 0.25 inch, PHS
	210-0053-00			3		WASHER, lock, split, 0.092 ID x 0.175 inch OD
-168	210-1134-00			3		WASHER, flat, 0.09 ID x 0.25 inch OD
-169	136-0252-04			48		SOCKET, pin connector
-170	131-0590-00			2		TERMINAL, pin, 0.71 inch long
-171	131-1030-00			16		CONTACT, electrical
	131-1031-00			16		CONTACT ASSEMBLY, top
	210-0779-00			16		RIVET, 0.108 inch long
-172	337-1406-00			2		SHIELD, electrical contact
-173	354-0391-00			2		RING, retaining
-174	401-0081-02			2		BEARING, front
	- - - - - -			-		mounting hardware for each: *(not included w/bearing)*
	210-0591-00			4		NUT, hex., 4-40 x 0.188 inch
-175	214-1127-00			4		ROLLER, detent
-176	214-1139-00[1]			-		SPRING, flat, gold
	214-1139-02[1]			-		SPRING, flat, green
	214-1139-03[1]			-		SPRING, flat,red
-177	105-0227-00			2		DRUM, cam switch
-178	401-0113-01			2		BEARING, rear
	- - - - - -			-		mounting hardware for each: *(not included w/bearing)*
	210-0591-00			4		NUT, hex., 4-40 x 0.188 inch
-179	- - - - - -			2		RESISTOR, variable
	- - - - - -			-		mounting hardware for each: *(not included w/resistor)*
-180	211-0062-00			2		SCREW, 2-56 x 0.312 inch, PHS
-181	210-0001-00			2		WASHER, lock, internal, 0.092 ID x 0.18 inch OD
-182	210-0405-00			2		NUT, hex., 2-56 x 0.188 inch

[1]Replace only with part bearing the same color code as the original part in your instrument.

FIGURE 2 CHASSIS, REAR & STANDARD ACCESSORIES (cont)

Fig. & Index No.	Tektronix Part No.	Serial/Model No. Eff	Serial/Model No. Disc	Qty	1 2 3 4 5	Description
2-183	407-0900-00			2		BRACKET, variable resistor
	- - - - - -			-		mounting hardware for each: *(not included w/bracket)*
-184	211-0022-00			2		SCREW, 2-56 x 0.188 inch, PHS
	210-0001-00			2		WASHER, lock, internal, 0.092 ID x 0.18 inch OD
-185	131-1157-00			4		CONTACT, electrical, ground
-186	211-0116-00			16		SCREW, sems, 4-40 x 0.312 inch, PHB
-187	670-1365-00	B010100	B029999	1		CIRCUIT BOARD ASSEMBLY—VERTICAL A2
	670-1365-01	B030000		1		CIRCUIT BOARD ASSEMBLY—VERTICAL A2
	- - - - - -			-		circuit board assembly includes:
	388-1924-00			1		CIRCUIT BOARD
-188	260-1236-00			2		SWITCH, push—BANDWIDTH & INVERT
	- - - - - -			-		mounting hardware for each: *(not included w/switch)*
-189	361-0384-00			2		SPACER, pushbutton switch
-190	337-1413-00			1		SHIELD, electrical
	337-1459-00			1		SHIELD, electrical
-191	407-0883-00			2		BRACKET, variable resistor
-192	- - - - - -			2		RESISTOR, variable
	- - - - - -			-		mounting hardware for each: *(not included w/resistor)*
-193	210-0583-00			1		NUT, hex., 0.25-32 x 0.312 inch
	210-0223-00			1		TERMINAL, lug, 0.25 inch diameter, SE
-194	131-0589-00			52		TERMINAL, pin, 0.50 inch long
-195	136-0252-04			115		SOCKET, pin connector
	- - - - - -			-		mounting hardware: *(not included w/circuit board assembly)*
-196	211-0116-00			5		SCREW, sems, 4-40 x 0.312 inch, PHB
-197	426-0683-00			1		CHASSIS, main
	- - - - - -			-		mounting hardware: *(not included w/chassis)*
	212-0040-00			5		SCREW, sems, 4-40 x 0.312 inch, PHB
-198	136-0466-00			1		WIRING HARNESS, main
	- - - - - -			-		wiring harness includes:
-199	131-0621-00			88		CONNECTOR, terminal
	131-0622-00			24		CONNECTOR, terminal
-200	131-0707-00			64		CONNECTOR, terminal
	131-0708-00			3		CONNECTOR, terminal
	131-0792-00			23		CONNECTOR, terminal
-201	136-0304-02			1		SOCKET, CRT, w/contacts
-202	352-0169-00			2		HOLDER, terminal connector, 2 wire *(black)*
-203	352-0162-00			3		HOLDER, terminal connector, 4 wire *(black)*
-204	352-0153-00			2		HOLDER, terminal connector, 5 wire *(black)*
-205	352-0154-00			1		HOLDER, terminal connector, 6 wire *(black)*
-206	352-0198-00			7		HOLDER, terminal connector, 2 wire *(black)*
-207	352-0199-00			6		HOLDER, terminal connector, 3 wire *(black)*
-208	352-0200-00			2		HOLDER, terminal connector, 4 wire *(black)*
-209	352-0201-00			3		HOLDER, terminal connector, 5 wire *(black)*
-210	352-0202-00			3		HOLDER, terminal connector, 6 wire *(black)*
-211	352-0203-00			3		HOLDER, terminal connector, 7 wire *(black)*
-212	352-0204-00			1		HOLDER, terminal connector, 8 wire *(black)*
-213	352-0205-00			1		HOLDER, terminal connector, 9 wire *(black)*
-214	352-0206-00			2		HOLDER, terminal connector, 10 wire *(black)*
	352-0161-00			1		HOLDER, terminal connector, 3 wire *(black)*
	352-0166-00			2		HOLDER, terminal connector, 8 wire *(black)*
	352-0168-00			2		HOLDER, terminal connector, 10 wire *(black)*

FIGURE 2 CHASSIS, REAR & STANDARD ACCESSORIES (cont)

Fig. & Index No.	Tektronix Part No.	Serial/Model No. Eff	Disc	Qty	1 2 3 4 5	Description
2-	131-0621-00			11		CONNECTOR, terminal
	131-0865-00			4		TERMINAL, pin, S-pin, male
	131-0622-00			2		CONNECTOR, terminal
	131-0707-00			5		CONNECTOR, terminal
	131-0792-00			2		CONNECTOR, terminal
	352-0199-00			1		HOLDER, terminal connector, 3 wire *(black)*
-215	352-0161-00			2		HOLDER, terminal connector, 3 wire *(black)*
-216	343-0254-00			1		CLAMP, CRT socket
-217	367-0117-00			1		PULL, CRT socket
-218	200-0917-01			1		COVER, CRT socket

STANDARD ACCESSORIES (not shown)

	010-0127-00			2		PROBE PACKAGE, P6006, 3.5 foot version
	070-1142-00			1		HANDBOOK, operator's
	070-1131-00			1		MANUAL, instruction

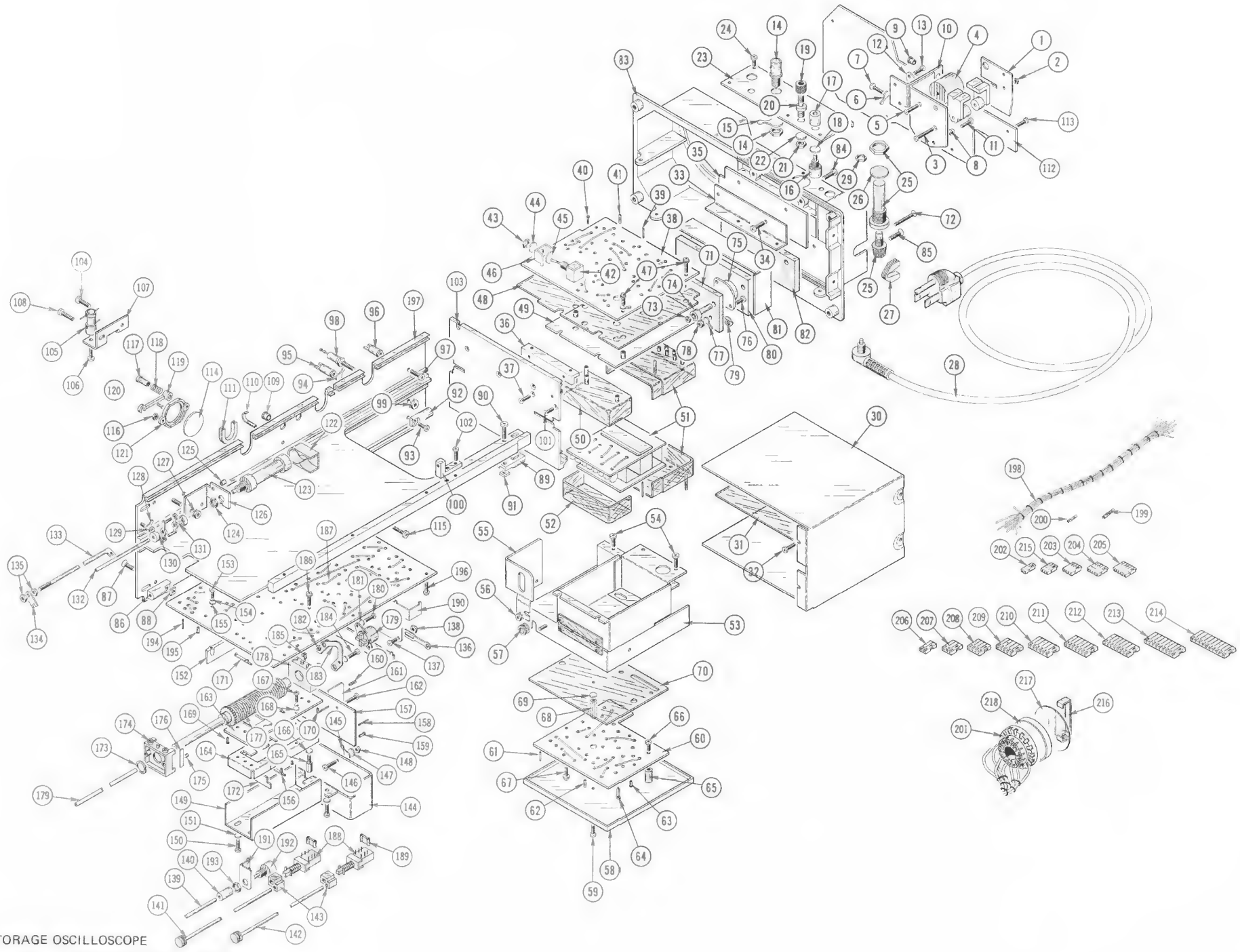

434/R434 STORAGE OSCILLOSCOPE

FIG.2 Chassis, Rear & Standard Accessoires

FIGURE 3 CABINETS

Fig. & Index No.	Tektronix Part No.	Serial/Model No. Eff	Disc	Qty	1 2 3 4 5	Description
3-1	200-1203-00			1		COVER, front
-2	200-0602-00			2		COVER, handle
-3	367-0140-01			1		HANDLE, carrying
	- - - - - -			-		mounting hardware: *(not included w/handle)*
-4	211-0512-00			4		SCREW, 6-32 x 0.50 inch, 100° csk, FHS
-5	214-0516-00			2		SPRING, handle index
-6	214-0513-00			2		INDEX, handle ring
-7	214-0515-00			2		INDEX, handle hub
-8	213-0139-00			2		SCREW, 10-24 x 0.375 inch, HHS
-9	210-0805-00			2		WASHER, flat, 0.204 ID x 0.438 inch OD
-10	348-0080-01			4		FOOT, cabinet
-11	390-0187-00			1		CABINET, wraparound
-12	426-0720-01			1		FRAME SECTION, cabinet
	- - - - - -			-		mounting hardware: *(not included w/frame section)*
-13	212-0102-00			4		SCREW, relieved shank, 8-32 x 2 inches, PHS
-14	348-0272-00			4		FOOT, cord wrap
	- - - - - -			-		mounting hardware for each: *(not included w/foot)*
-15	213-0012-00			2		SCREW, thread forming, 4-40 x 0.375 inch, 100° csk, FHS
-16	348-0277-00			ft		SHIELDING GASKET, electrical, 2.80 feet long
	016-0272-00			1		RACK ADAPTER
	- - - - - -			-		rack adapter includes:
-17	134-0067-00			5		PLUG, button, plastic
-18	016-0120-00			1		RACKMOUNT KIT, w/hardware
	129-0103-00			1		BINDING POST ASSEMBLY
	- - - - - -			-		binding post assembly includes:
-19	200-0103-00			1		NUT, knurled, 0.25-28 x 0.375 inch OD
-20	129-0077-00			1		POST, binding
	- - - - - -			-		mounting hardware: *(not included w/binding post assembly)*
-21	210-0455-00			1		NUT, hex., 0.25-28 x 0.375 inch
-22	210-0046-00			1		WASHER, lock, internal, 0.261 ID x 0.40 inch OD
-23	437-0124-00			1		CABINET ASSEMBLY, rack adapter
	- - - - - -			-		cabinet assembly includes:
-24	407-0250-00			2		BRACKET
	- - - - - -			-		mounting hardware for each: *(not included w/bracket)*
-25	210-0458-00			4		NUT, keps, 8-32 x 0.344 inch

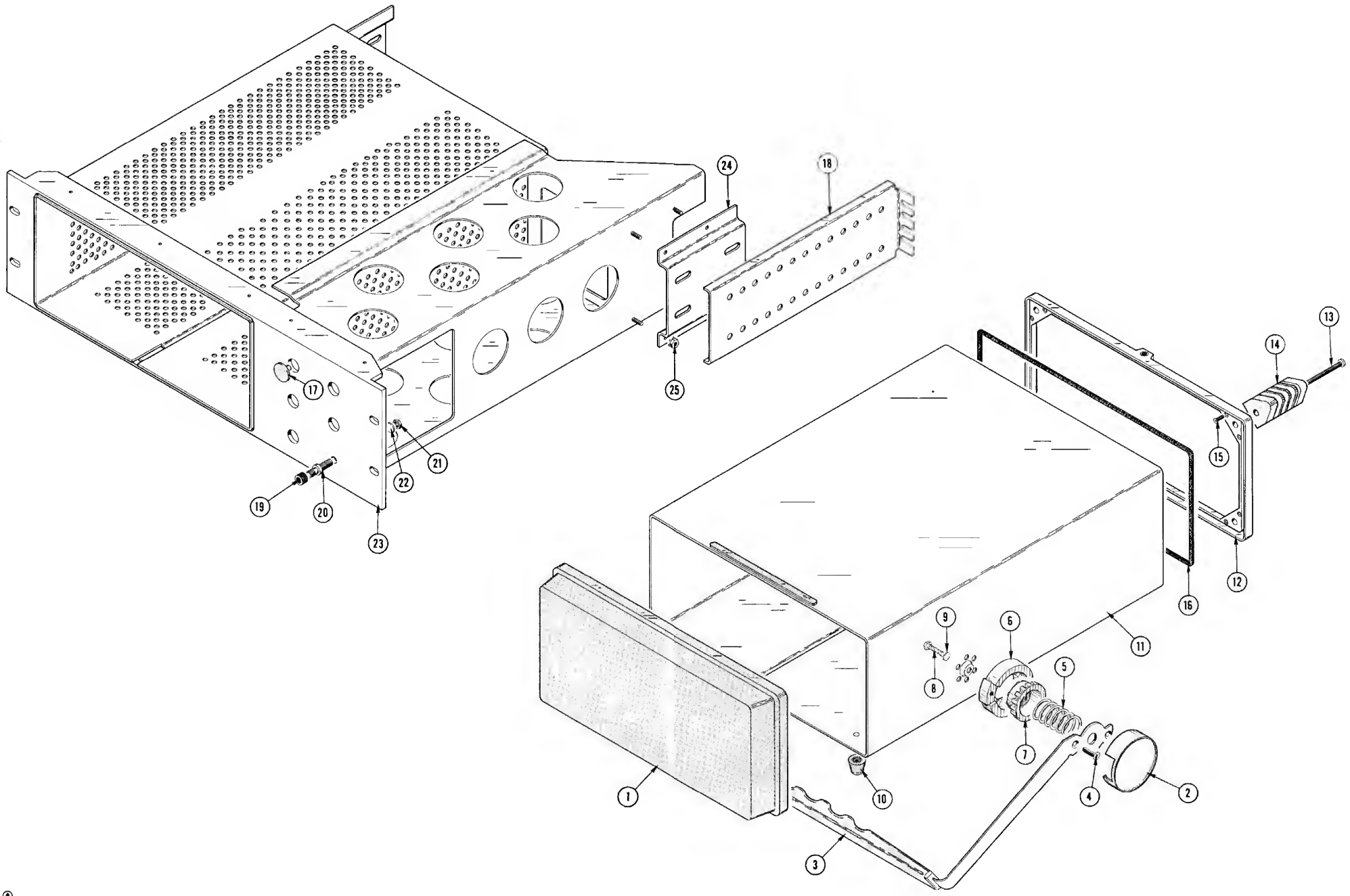

434/R434 STORAGE OSCILLOSCOPE

FIG.3 Cabinets

CARTON ASSEMBLY
(Part No. 065-0157-00)

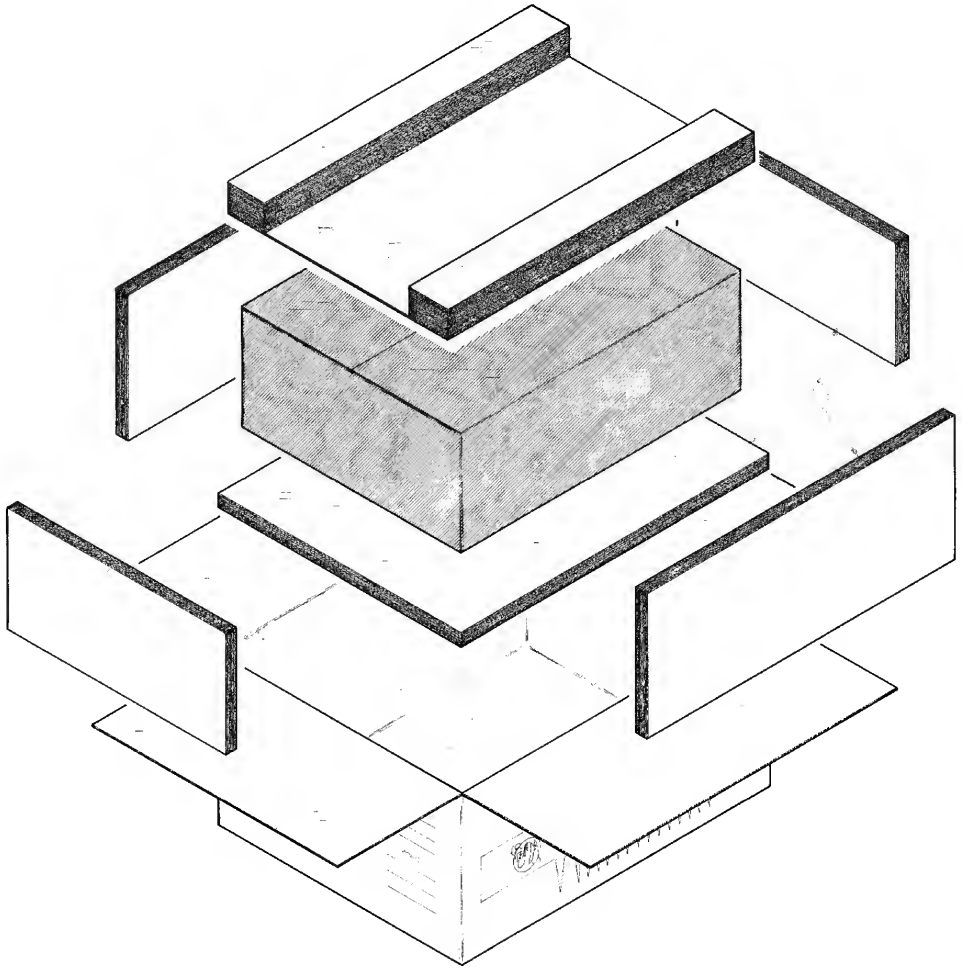

CARTON ASSEMBLY
(Part No. 065-0157-00)

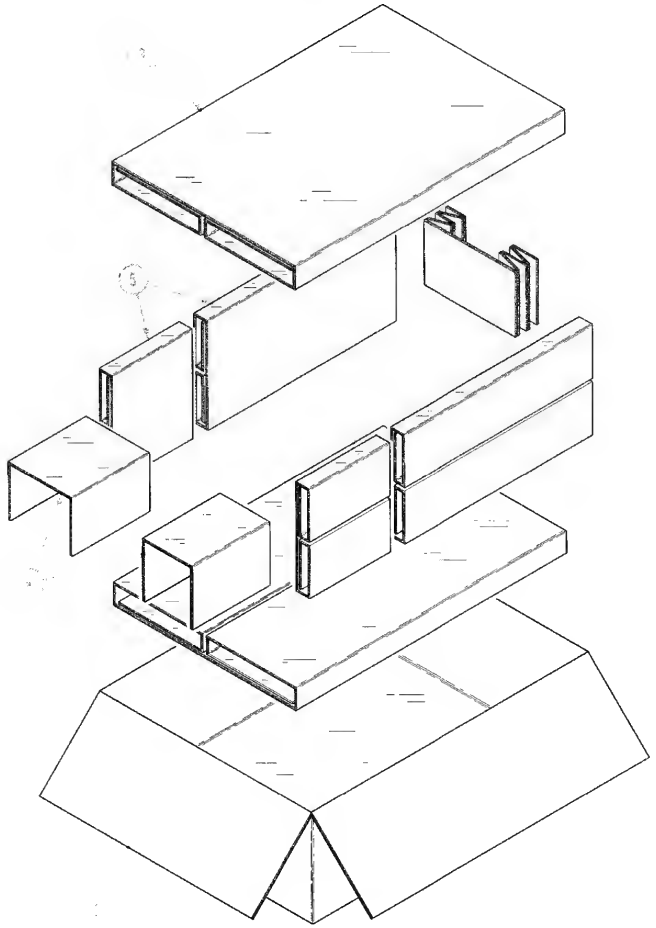

Fig. & Index No.	Tektronix Part No.	Serial/Model No. Eff	Serial/Model No. Disc	Qty	1 2 3 4 5	Description
4-	065-0157-00			1		CARTON ASSEMBLY
	- - - - - -			-		carton assembly includes:
-1	004-0361-00			1		PAD SET, 6 piece
-2	004-0461-00			1		CARTON, outer
-3	004-0357-00			2		PAD SET, 1 piece
-4	004-1103-00			1		PAD SET, 3 piece
-5	004-1102-00			1		PAD SET, 4 piece
-6	004-0460-00			1		CARTON, inner

FIG.4 R434 Repacking

CARTON ASSEMBLY
(Part No. 065-0156-00)

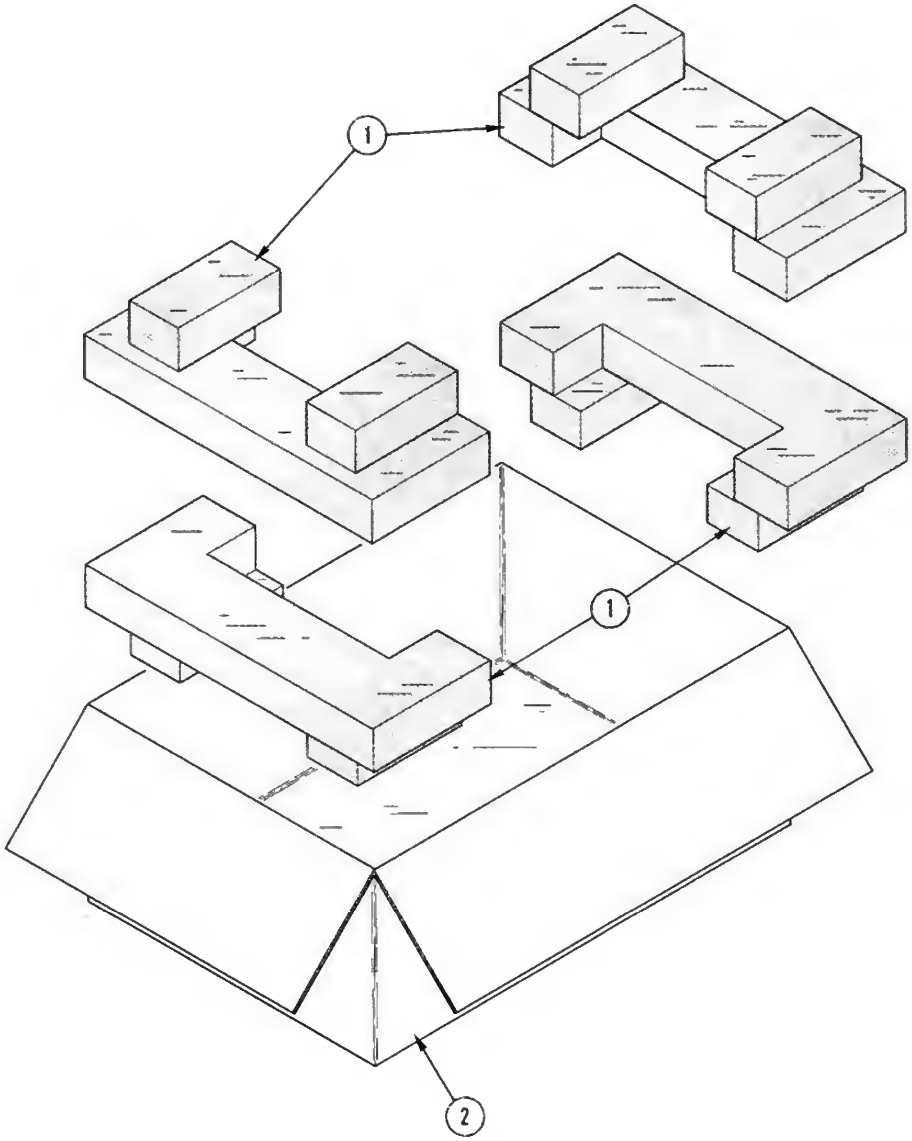

Fig. & Index No.	Tektronix Part No.	Serial/Model No. Eff	Disc	Qty	1 2 3 4 5	Description
5-	065-0156-00			1		CARTON ASSEMBLY
	- - - - - -			-		carton assembly includes:
-1	004-0285-00			2		ETHAFRAME
	004-0704-00			1		CARTON, accessory
-2	004-0794-00			1		CARTON

MANUAL CHANGE INFORMATION

At Tektronix, we continually strive to keep up with latest electronic developments by adding circuit and component improvements to our instruments as soon as they are developed and tested.

Sometimes, due to printing and shipping requirements, we can't get these changes immediately into printed manuals. Hence, your manual may contain new change information on following pages.

A single change may affect several sections. Sections of the manual are often printed at different times, so some of the information on the change pages may already be in your manual. Since the change information sheets are carried in the manual until ALL changes are permanently entered, some duplication may occur. If no such change pages appear in this section, your manual is correct as printed.

TEXT CORRECTIONS

SECTION 1 Specification

Page 1-2 TABLE 1-1

CHANGE: Supplemental Information for "Bandwidth At Upper -3 dB Point" to read:

Bandwidth checked with a six-division reference signal DC coupled from a 25 Ω source, centered vertically.

CHANGE: The characteristic titled "Bandwidth At Lower -3 dB Point (AC Coupled)" to read:

Lower -3 dB Frequency
(AC Coupled)

Without Probe or	
With X1 Probe	10 Hz or less.
With X10 Probe	1 Hz or less.

Page 1-6 TABLE 1-1

CHANGE: Storage Writing Speed information to read as follows:

Storage Writing Speed

Standard CRT	100 Div/ms minimum (400 Div/ms enhanced)	Measured within the center 6 vertical and 8 horizontal divisions. (Some writing speed degradation with usage is normal)
Option 1 CRT	500 Div/ms minimum (5 Div/μs enhanced)	

SECTION 4 Maintenance

Page 4-10 Cathode-Ray Tube Replacement

CHANGE: Step 5 to read:

5. Remove the Z Axis and Storage Circuit Boards from the instrument.

SECTION 5 Calibration

Page 5-11 Step 12. Check Stored Writing Speed

ADD: After the step title:

NOTE

Storage Writing Speed specifications apply for a new CRT. Some degradation with usage is normal.

Page 5-12 Step 12

CHANGE: The following portions of the step to read:

k. CHECK--CRT stored display for no breaks or gaps exceeding 0.025 inch within the center 6 vertical and 8 horizontal divisions. Proper storage of the sweep indicates a storage writing rate of at least 100 divisions per millisecond (500 Div/ms for Option 1 CRT).

r. CHECK--CRT stored display for no breaks or gaps exceeding 0.025 inch within the center 6 vertical and 8 horizontal divisions. Proper storage of the sweep indicates an enhanced storage writing speed of at least 400 divisions per millisecond (5 Div/μs for Option 1 CRT).

434 All Serial Numbers

ELECTRICAL PARTS LIST CORRECTION

A15 UPPER STORAGE SWITCH Circuit Board Assembly

CHANGE TO:

670-1525-00		Complete Board
	Switches	
Wired or Unwired		
$S90A_1^1$ $S90B_1^1$ $S90C^1$ 670-1525-00	Push-push	UPPER SCREEN

A16 LOWER STORAGE SWITCH Circuit Board Assembly

CHANGE TO:

670-1524-00		Complete Board
	Switches	
Wired or Unwired		
$S92A_1^1$ $S92B_1^1$ $S92C^1$ 670-1524-00	Push-push	LOWER SCREEN

MECHANICAL PARTS LIST CORRECTION

SECTION 9 Page 9-7

CHANGE TO:

Fig. 1-160	670-1525-00	1	CIRCUIT BOARD ASSEMBLY, switch-UPPER STORAGE A15
	. . . . .		
Fig. 1-163	670-1524-00	1	CIRCUIT BOARD ASSEMBLY, switch-LOWER STORAGE A16

432 EFF SN B050000-up
434 EFF SN B050000-up

ELECTRICAL PARTS LIST CORRECTION

A8 HORIZONTAL Circuit Board Assembly

CHANGE TO:

(432)	670-1359-08	Complete Board
(434)	670-1359-09	Complete Board

ADD:

R747	315-0682-00	6.8 kΩ	1/4 W	5%

MECHANICAL PARTS LIST CORRECTION

SECTION 9 Page 9-4

CHANGE TO:

Fig. 1-74	670-1359-08	(432)	1	CIRCUIT BOARD ASSEMBLY-HORIZONTAL A8
	670-1359-09	(434)	1	CIRCUIT BOARD ASSEMBLY-HORIZONTAL A8
	- - - - - -		-	circuit board assembly includes:
	388-1918-01		1	CIRCUIT BOARD
Fig. -76	131-0604-00		25	CONTACT, cam switch
Fig. -80	214-0579-00		18	PIN, test point
	105-0262-01		1	ACTUATOR ASSEMBLY, cam switch
Fig. -96	105-0231-01		1	DRUM, sweep

SCHEMATIC CORRECTION

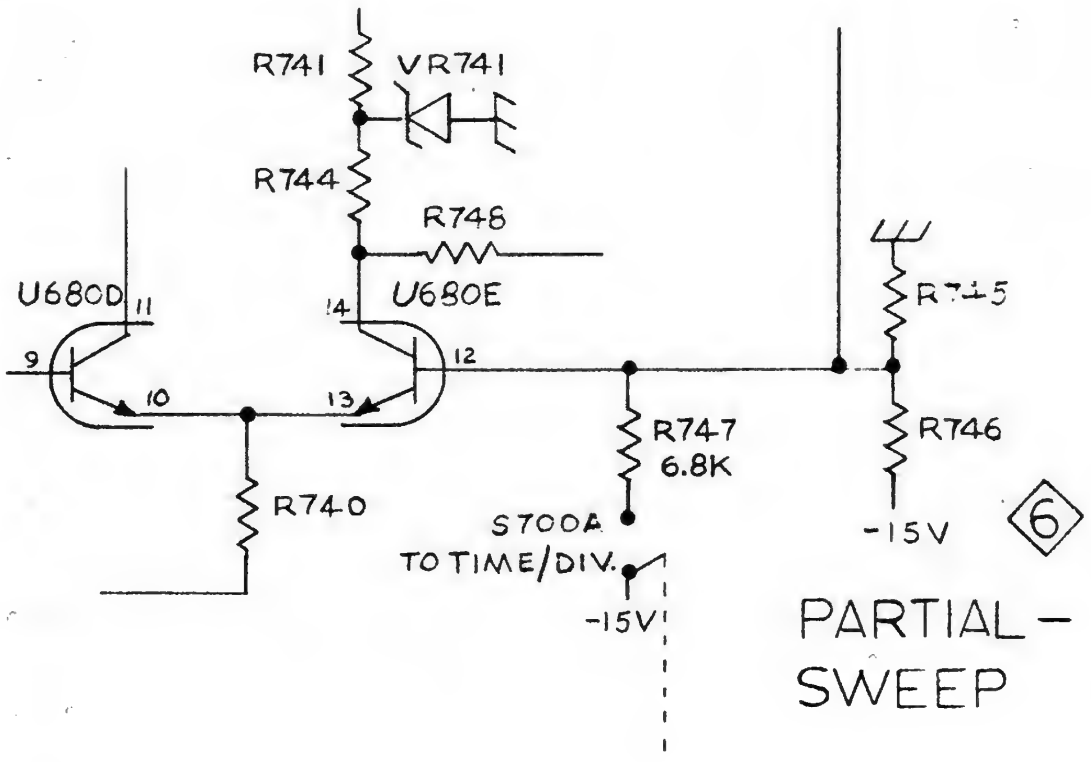

M18,074/1171

ELECTRICAL PARTS LIST AND SCHEMATIC CORRECTION

A2 VERTICAL Circuit Board Assembly

CHANGE TO:

C460	281-0504-00	10 pF	(nominal value)	Selected
R220		Selected	(90.9 to 102 Ω range)	
R223	321-0131-00	226 Ω	(nominal value)	Selected
R320		Selected	(90.9 to 102 Ω range)	
R323	321-0131-00	226 Ω	(nominal value)	Selected

ADD:

[1]R219	315-0104-00	10 kΩ	1/4 W	5%
[2]R222	315-0183-00	18 kΩ	1/4 W	5%
[1]R319	315-0104-00	10 kΩ	1/4 W	5%
[2]R322	315-0183-00	18 kΩ	1/4 W	5%

Note: R220 and C222 board locations are interchanged,
R320 and C322 board locations are interchanged.

[1]Added in parallel with R220 and R320 respectively as necessary.

[2]Added in parallel with R223 and R323 respectively as necessary.

TEXT CORRECTION

SECTION 5 Calibration

(434) Page 5-15 Step 20. Check CH 1 Variable VOLTS/DIV Range and Attenuator Accuracy

(432) Page 5-12 Step 15 Check CH 1 Variable VOLTS/DIV Range and Attenautor Accuracy

ADD: Before TABLE 5-1:

NOTE

Replacing U210 in Channel 1 or U310 in Channel 2 may affect gain accuracy at 1 and 2 mV/DIV. R220 (CH 1) and R320 (CH 2) are selectable for 1 mV/DIV gain accuracy. R223 (CH 1) and R323 (CH 2) are selectable for 2 mV/DIV gain accuracy. If the 1 mV/DIV or 2 mV/DIV ranges are outside of specified tolerances at the completion of step 19 Gain adjustments, an approximate 2% resistance change of R220, R320, R223, or R323 will result in a 2% gain change for the corresponding range and channel. If the display exceeds 5.15 divisions, increase the resistor value by 2%. If the display is less than 4.85 divisions, decrease the value of the appropriate resistor by 2%. If less than a 2% gain change is desired, alter the effective resistor value in 1% increments by paralleling the next higher optional resistor value desired with R219, R222, R319, or R322 as necessary.

432 EFF SN B050000-up
434 EFF SN B050000-up

ELECTRICAL PARTS LIST AND SCHEMATIC CORRECTION

A8 HORIZONTAL Circuit Board Assembly

CHANGE TO:

670-1359-06 (432)		Complete Board			
670-1359-07 (434)		Complete Board			
R675	321-0247-00	3.65 kΩ	1/8 W	Prec	1%
R861	321-0113-00	147 Ω	1/8 W	Prec	1%
CR835	152-0153-00	Silicon	Replaceable by FD7003 or CD5574		
CR865	152-0153-00	Silicon	Replaceable by FD7003 or CD5574		

A2 VERTICAL Circuit Board Assembly

ADD:

L275	108-0443-00	25 µH			
L285	108-0443-00	25 µH			
C278	281-0536-00	1000 pF	Cer	500 V	

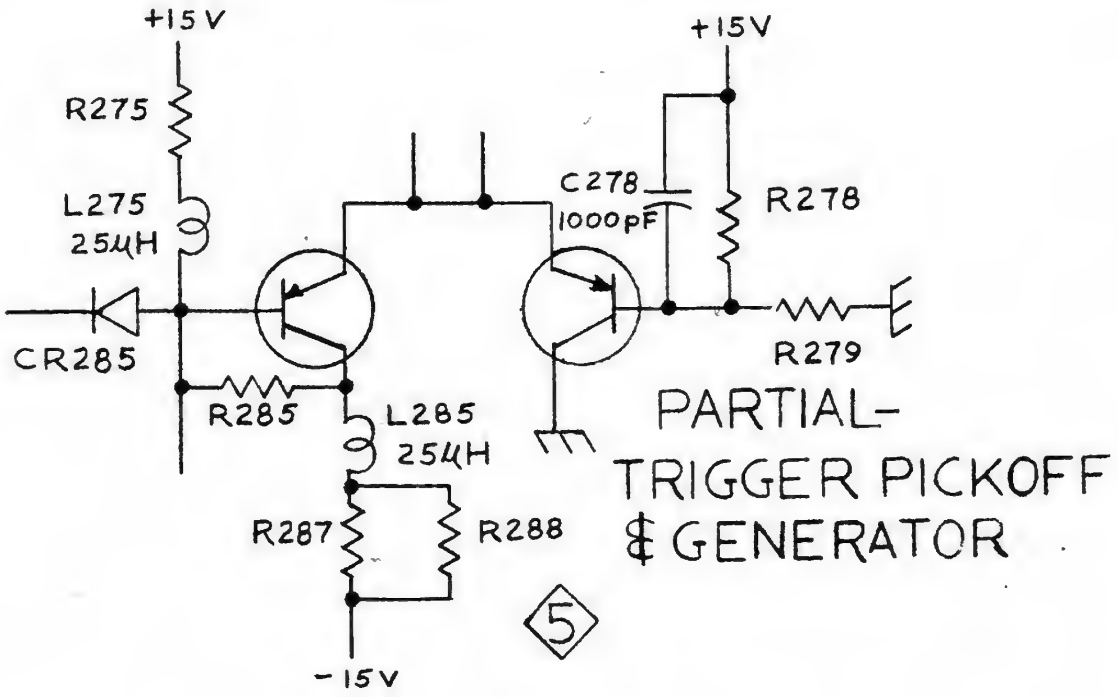

M18,162/971
Rev.#1/1171

432 EFF SN B060000-up
434 EFF SN B060000-up

ELECTRICAL PARTS LIST AND SCHEMATIC CORRECTION

A8 HORIZONTAL Circuit Board Assembly

CHANGE TO:

R871	323-0327-00	24.9 kΩ	1/2 W	Prec	1%
R881	323-0327-00	24.9 kΩ	1/2 W	Prec	1%

ADD:

R872	323-0327-00	24.9 kΩ	1/2 W	Prec	1%
R880	323-0327-00	24.9 kΩ	1/2 W	Prec	1%

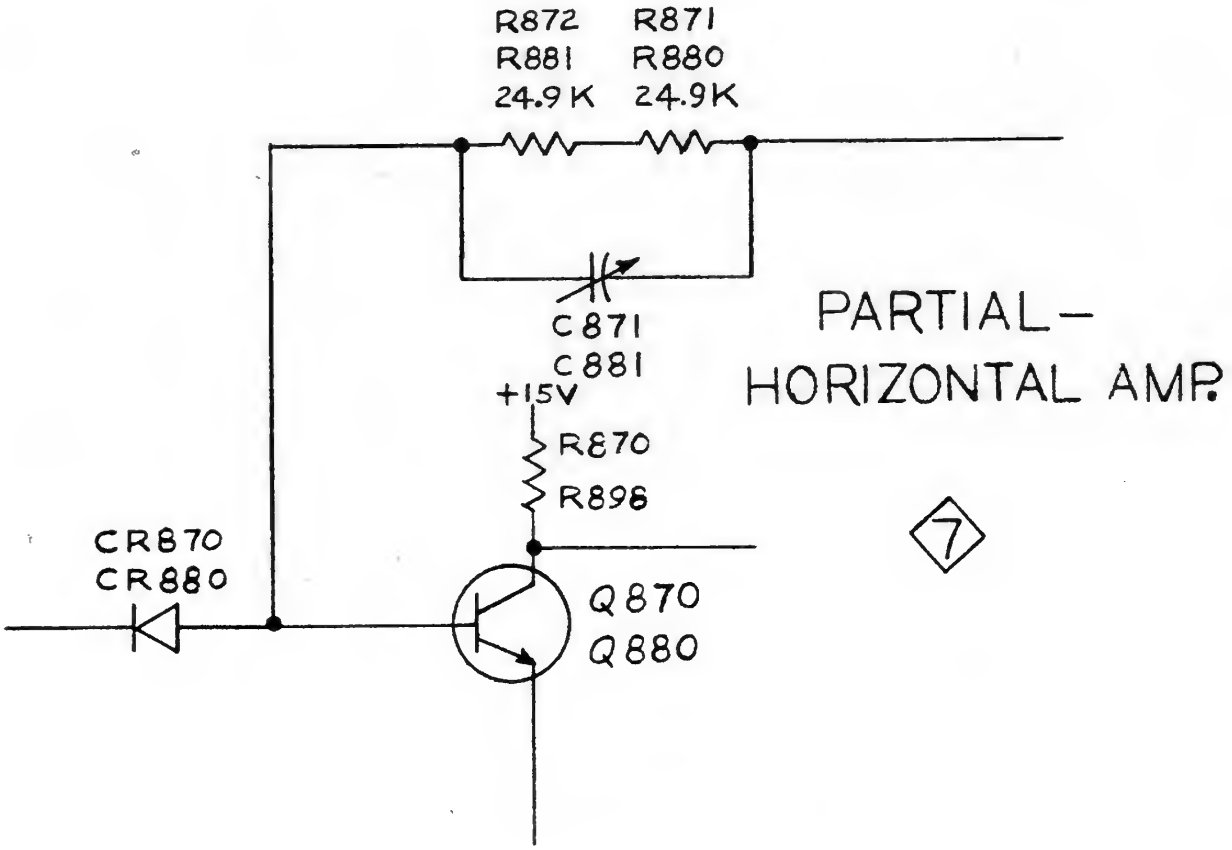

ELECTRICAL PARTS LIST CORRECTION

CHASSIS

CHANGE TO:

*R83	Selected for optimum focus tracking with intensity change.	

A8 HORIZONTAL Circuit Board Assembly

CHANGE TO:

(432)	670-1359-10	Complete Board				
(434)	670-1359-11	Complete Board				
	R795	321-0269-00	6.19 kΩ	1/8 W	Prec	1%

A14 Z AXIS Circuit Board Assembly

CHANGE TO:

670-1332-02	Complete Board				
R931	321-0305-00	14.7 kΩ	1/8 W	Prec	1%
R935	316-0472-00	4.7 kΩ	1/4 W		10%

ADD:

C981	283-0162-00	0.01 µF	Cer	5000 V	+80%-20%
R964	301-0755-00	7.5 MΩ	(nominal value)		Selected

MECHANICAL PARTS LIST CORRECTION

SECTION 9 Page 9-4

(432)	1-74	670-1359-10	1	CIRCUIT BOARD ASSEMBLY-HORIZONTAL A8
(434)	1-74	670-1359-11	1	CIRCUIT BOARD ASSEMBLY-HORIZONTAL A8

Page 9-6

	1-129	670-1332-02	1	CIRCUIT BOARD ASSEMBLY -Z AXIS A 14

*Added as necessary.

SCHEMATIC CORRECTION

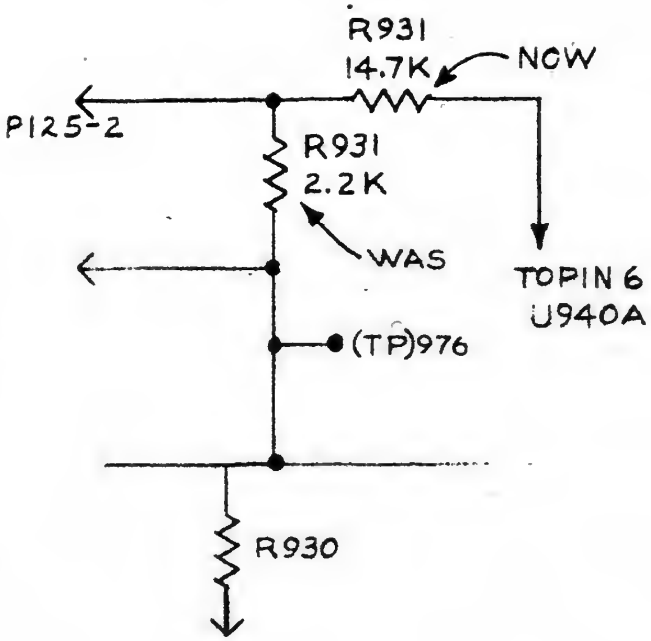

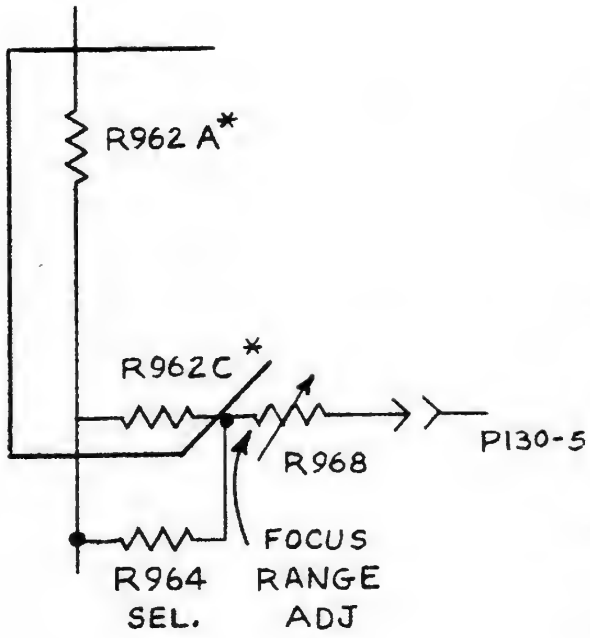

PARTIAL — CRT CIRCUIT & CALIBRATOR

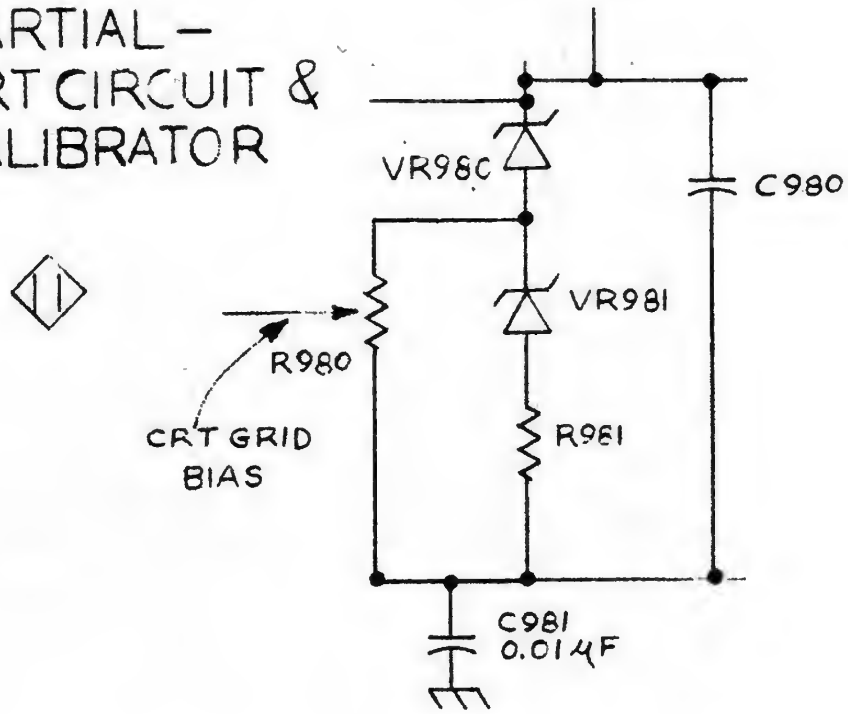

M18,329/1171

TEXT CORRECTION

SECTION 2 Operating Instructions

Page 2-5 General Operating Information

ADD: At the end of the first paragraph under ' Intensity Control':

.....of display intensity. Maximum intensity is reached with the control advanced to approximately 3 o'clock. Further advancing the control overrides the blanking, thus in single-sweep operation, a spot can be obtained at the start of the sweep for vertical and horizontal beam location. For instruments with SN B060000 and up, a range is provided between the point of maximum intensity and blanking override. This allows the operator to adjust the intensity control within this range to improve the focus for single-sweep storage near the writing speed limit.

SECTION 5 Calibration

Page 5-11 Step 12 Check Stored Writing Speed

ADD: The following note after the step title:

NOTE

For all Serial numbers, Storage Writing Speed specifications apply for a new CRT. Some degradation with usage is normal. With the Option 1 CRT, sustained use (6 hours or more) of the instrument in Non-Store mode or in Store mode with no writing may result in a decrease in writing speed. Writing speed can be restored by leaving the CRT target fully stored for five to fifteen minutes, then erase and resume desired operation.

432/R EFF SN B070000-up
434/R EFF SN B070000-up

ELECTRICAL PARTS LIST AND SCHEMATIC CORRECTION

A2 VERTICAL Circuit Board Assembly

CHANGE TO:

C222	281-0571-00	82 pF	Cer	500 V	20%
C322	281-0571-00	82 pF	Cer	500 V	20%

M18,365/1271

ADD:

VR525	152-0166-00	Zener	1N753A	400 mW, 6.2V, 5%
VR565	152-0166-00	Zener	1N753A	400 mW, 6.2V, 5%

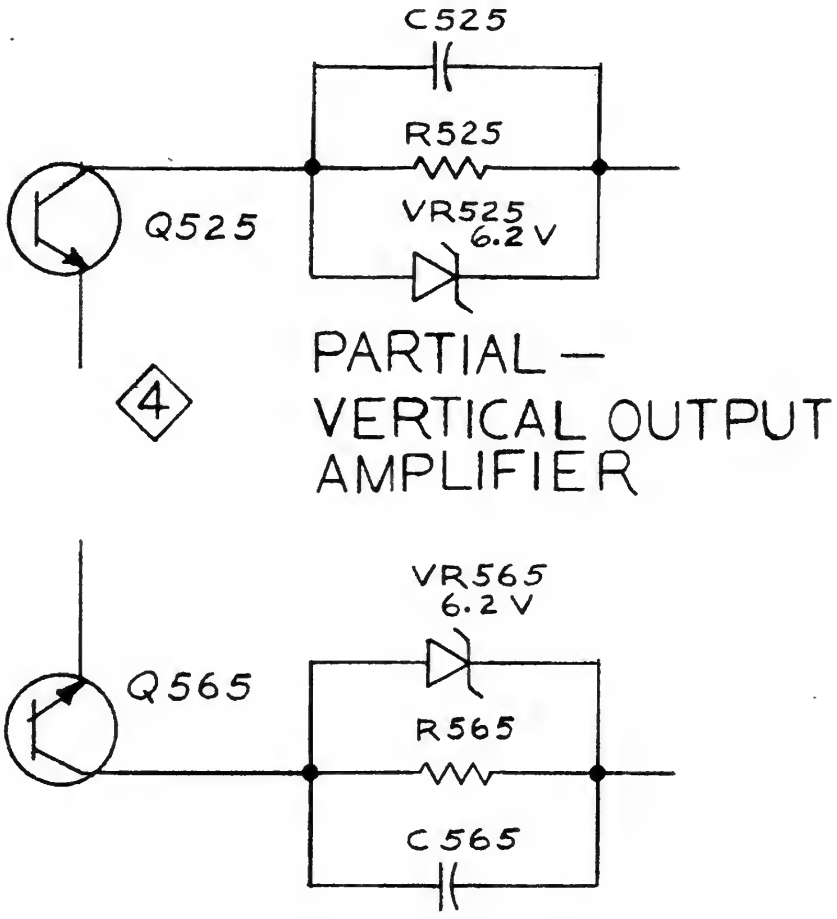

M18,369/1271

ELECTRICAL PARTS LIST AND SCHEMATIC CORRECTION

A14 Z AXIS Circuit Board Assembly

CHANGE TO:

VR980	152-0357-00	Zener	1N983B	400 mW, 82 V, 5%
VR981	152-0285-00	Zener	1N980B	400 mW, 62 V, 5%

ELECTRICAL PARTS LIST AND SCHEMATIC CORRECTION

A17 STORAGE Circuit Board Assembly

CHANGE TO:

R1232	306-0124-00	120 kΩ	2 W	10%
R1282	306-0124-00	120 kΩ	2 W	10%

OPTION I

This insert includes specification, text and part number changes to allow this manual to also apply to instruments equipped with the Option 1 Fast Stored Writing Speed cathode ray tube.

SECTION 1 Specification

Page 1-6 TABLE 1-1

CHANGE: Stored Writing Speed to read:

Stored Writing Speed	
Standard CRT	100 cm/ms minimum (400 cm/ms enhanced)
Option 1 CRT	500 cm/ms minimum (5000 cm/ms enhanced)

SECTION 2 Operating Instructions

Page 2-15 Fast Single-Sweep Enhancement

CHANGE: The following steps as indicated:

1. Apply a 30 kHz (350 kHz for Option 1 CRT) sine-wave signal for a CRT display of approximately 3.2 divisions P-P amplitude to one of the vertical input connectors.

2. Set up a normal-intensity non-stored display of the signal in the manner given in "Normal Sweep Display".

5. With the TIME/DIV switch set to 10 µs (2 µs for Option 1 CRT), apply a single sweep.....

SECTION 5 Calibration

Page 5-12 Step 12. Check Stored Writing Speed.

CHANGE: The following portions of step 12 as indicated:

c. Set the Time-Mark Generator for an output of 10 µs (1 µs for Option 1 CRT) markers.

Section 5 (continued)

e. Set the TIME/DIV switch and the TIME/DIV Variable control for one marker (two markers for Option 1 CRT) per division.

k. .....Proper storage of a 10 μs/division (2 μs/division for Option 1 CRT) sweep indicates a storage writing rate of at least 100 (500 for Option 1 CRT) centimeters per millisecond.

n. .....control for one marker per four (five for Option 1 CRT) divisions.

r. .....Proper storage of a 2.5 (0.2 for Option 1 CRT) μs/division sweep indicatesan enhanced storage writing speed of at least 400 (5000 for Option 1 CRT) centimeters per millisecond.

SECTION 7 Electrical Parts List

Page 7-3 Electron Tube

CHANGE: As follows:

V100	*154-0650-00	CRT, Standard
V100	*154-0666-02	CRT, Option 1, Fast Writing Speed

SECTION 9 Mechanical Parts List

Page 9-16 Tektronix Part No. 131-0865-00

CHANGE TO:

131-0865-00	4	TERMINAL, pin, S-pin, male (Standard CRT)
131-0049-00	4	TERMINAL, pin, female (Option 1 CRT)

STANDARD ACCESSORIES

CHANGE TO:

010-6061-01	2	PROBE PACKAGE, P6061, 3.5 foot w/X10 readout spring

432/R432 EFF SN B100000-up
434/R434 EFF SN B100000-up

ELECTRICAL PARTS LIST AND SCHEMATIC CORRECTION

A2 VERTICAL Circuit Board Assembly

ADD:

C471	281-0592-00	4.7 pF	Cer	±1/2 pF

A6 TRIGGER SOURCE SWITCH Circuit Board Assembly

ADD:

R61	316-0104-00	100 kΩ	1/4 W	10%

A8 HORIZONTAL Circuit Board Assembly

CHANGE TO:

C663	281-0549-00	68 pF	Cer	500 V
CR644	152-0125-00	Tunnel	TD3A, 4.7 mA	
R640	316-0392-00	3.9 kΩ	1/4 W	10%

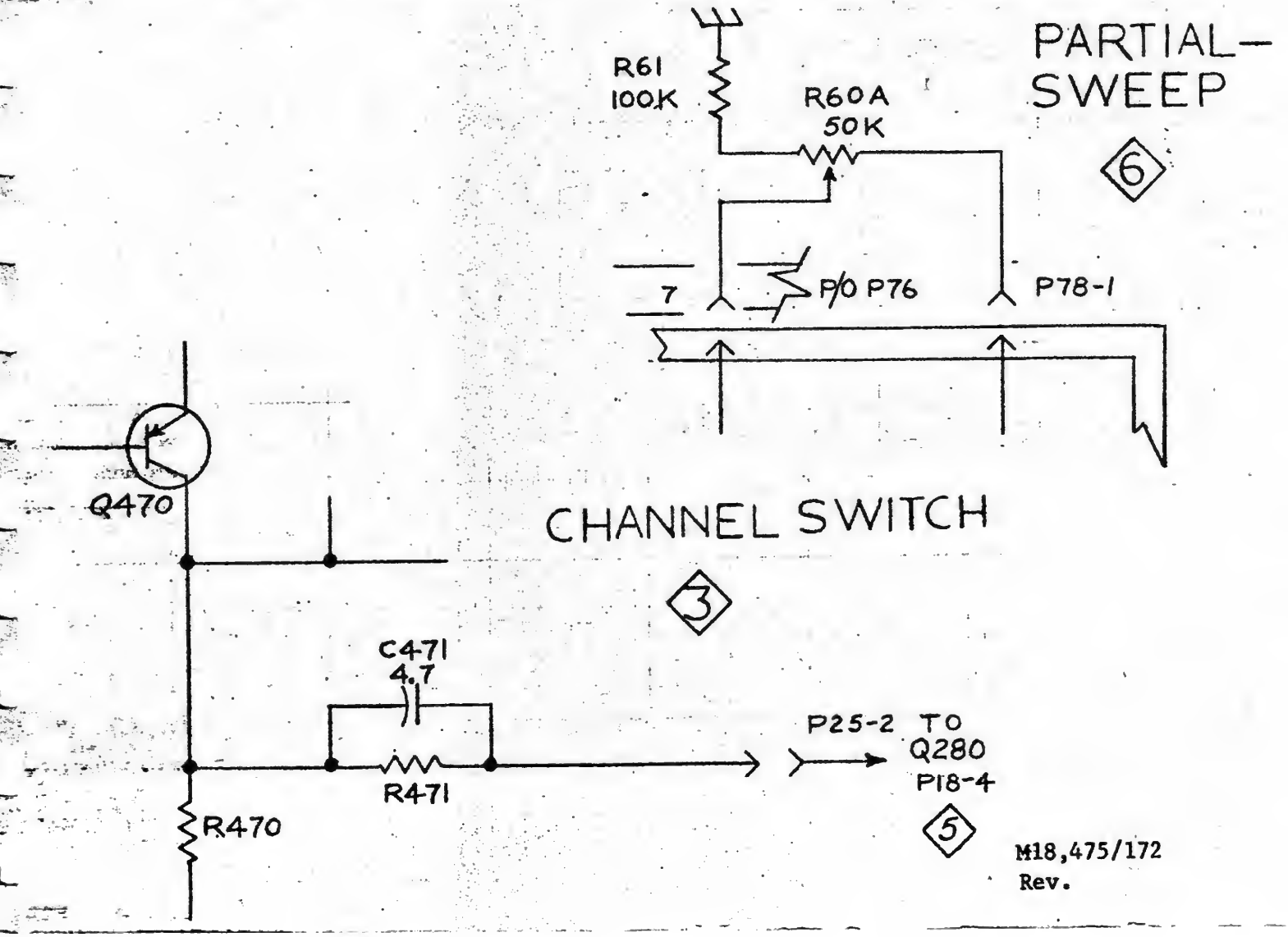

M18,475/172
Rev.